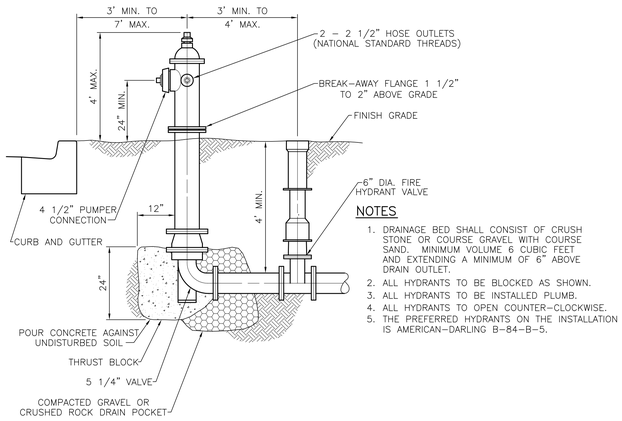

NOTES

1. DRAINAGE BED SHALL CONSIST OF CRUSH STONE OR COURSE GRAVEL WITH COURSE SAND. MINIMUM VOLUME 6 CUBIC FEET AND EXTENDING A MINIMUM OF 6" ABOVE DRAIN OUTLET.
2. ALL HYDRANTS TO BE BLOCKED AS SHOWN.
3. ALL HYDRANTS TO BE INSTALLED PLUMB.
4. ALL HYDRANTS TO OPEN COUNTER-CLOCKWISE.
5. THE PREFERRED HYDRANTS ON THE INSTALLATION IS AMERICAN-DARLING B-84-B-5.

1 FIRE HYDRANT
C6.1 | C4.3 NOT TO SCALE

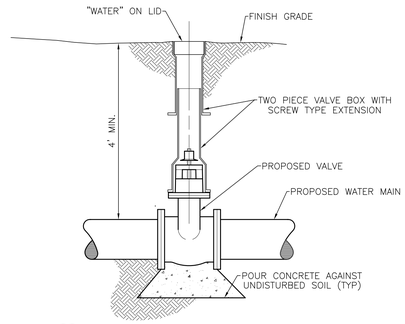

2 VALVE IN VALVE BOX
C6.1 | C4.3 NOT TO SCALE

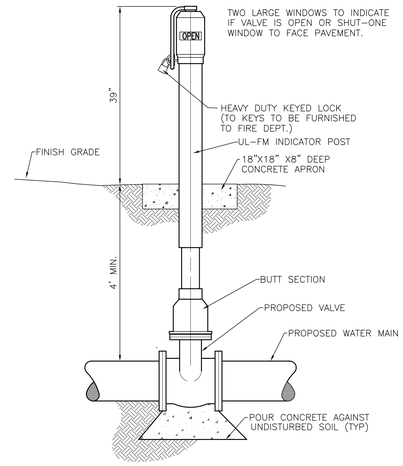

3 POST INDICATOR VALVE
C6.1 | C4.3 NOT TO SCALE

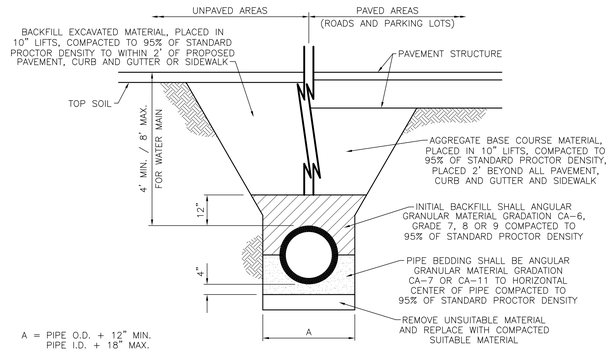

4 TRENCH DETAIL FOR PVC PIPE
C6.1 | C4.3 NOT TO SCALE

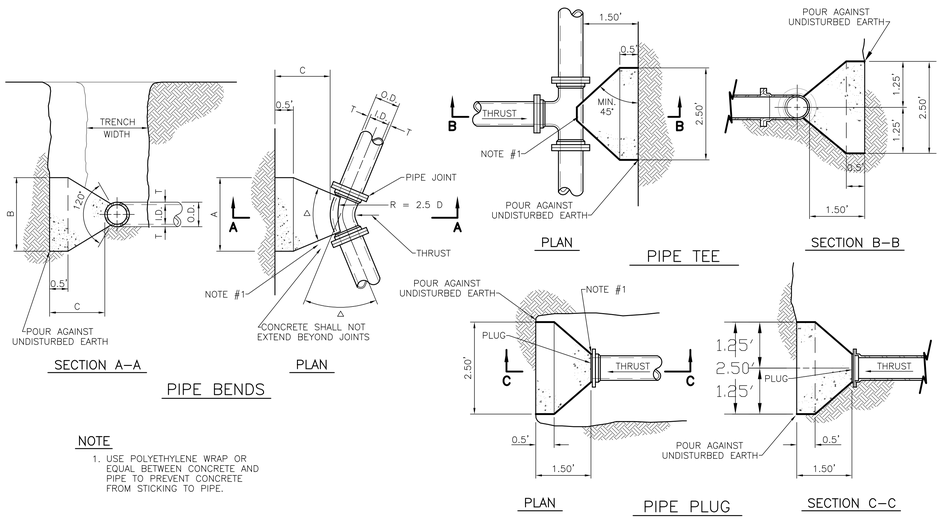

NOTE

1. USE POLYETHYLENE WRAP OR EQUAL BETWEEN CONCRETE AND PIPE TO PREVENT CONCRETE FROM STICKING TO PIPE.

				Δ = 11.25°				Δ = 22.50°				Δ = 45°				Δ = 90°			
I.D. (IN.)	T (IN.)	O.D. (IN.)	C (FT.)	A (FT.)	B (FT.)	VOL. (C.Y.)	THRUST TONS	A (FT.)	B (FT.)	VOL. (C.Y.)	THRUST TONS	A (FT.)	B (FT.)	VOL. (C.Y.)	THRUST TONS	A (FT.)	B (FT.)	VOL. (C.Y.)	THRUST TONS
4	0.52	5.04	1.50	1.00	1.50	0.10	1.0	1.50	1.50	0.10	2.0	2.00	2.00	0.20	3.9	5.00	1.50	0.40	7.1
6	0.55	7.10	1.50	1.00	1.50	0.10	1.0	1.50	1.50	0.10	2.0	2.00	2.00	0.20	3.9	5.00	1.50	0.40	7.1
8	0.60	9.20	1.50	1.00	1.50	0.10	1.0	1.50	1.50	0.10	2.0	2.00	2.00	0.20	3.9	5.00	1.50	0.40	7.1

5 THRUST BLOCKS
C6.1 | C4.3 NOT TO SCALE

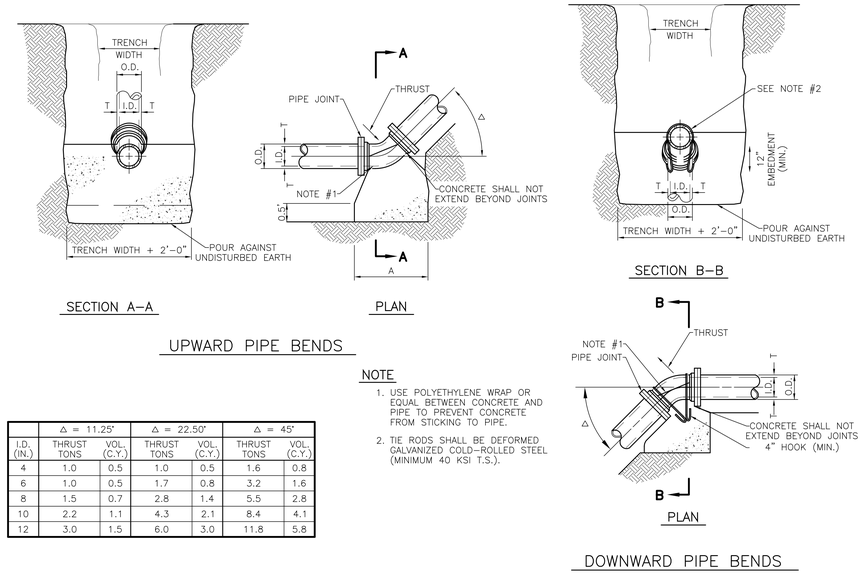

NOTE

1. USE POLYETHYLENE WRAP OR EQUAL BETWEEN CONCRETE AND PIPE TO PREVENT CONCRETE FROM STICKING TO PIPE.
2. TIE RODS SHALL BE DEFORMED GALVANIZED COLD-ROLLED STEEL (MINIMUM 40 KSI T.S.).

	Δ = 11.25°		Δ = 22.50°		Δ = 45°	
I.D. (IN.)	THRUST TONS	VOL. (C.Y.)	THRUST TONS	VOL. (C.Y.)	THRUST TONS	VOL. (C.Y.)
4	1.0	0.5	1.0	0.5	1.6	0.8
6	1.0	0.5	1.7	0.8	3.2	1.6
8	1.5	0.7	2.8	1.4	5.5	2.8
10	2.2	1.1	4.3	2.1	8.4	4.1
12	3.0	1.5	6.0	3.0	11.8	5.8

6 VERTICAL THRUST BLOCKS
C6.1 | C4.3 NOT TO SCALE

SYM.	D.O. NO.	ACTION	DATE	DESCRIPTION OF REVISION
			27 JAN 2012	AMENDMENT 0001

DEFENSE COMMISSARY AGENCY
DeCA LOGISTICS AND ENGINEERING GROUP
FORT LEE, VIRGINIA
LACKLAND AFB, TEXAS

DESIGNED BY:
DRAWN BY:
REVIEWED BY:
SUBMITTED BY:
ENGINEER:

DESIGN/BUILD NEW COMMISSARY

SITE DETAILS

MAXWELL A.F.B. – GUNTER ANNEX, ALABAMA

SOL. NO. HDEC03-12-R-0003 DATE: 27 JAN 2012
PROJECT NO. DE04MP05
DRAWING NUMBER
SHEET NO. OF
SEQUENCE NO. C4.3