DRAFT Stormwater Pollution Prevention Plan for:

New Commissary Facility
Intersection of Grayling Avenue and Golet Avenue
Naval Submarine Base New London, CT

Facility Operator: Defense Commissary Agency
Richard Baes
2250 Foulois St, Suite 3
Lackland AFB, TX 78236-1039
(210) 671-8421
(richard.baes@deca.mil)

Stormwater Manager and SWPPP Contact:

Stormwater Program Manager: To be Determined

SWPPP Contractor Contact: To Be Determined

SWPPP Preparation Information:
Prepared by: Civiltech Engineering, Inc.
Gary P. Overbay, P.E.
500 Coventry Lane, Suite 290
Crystal Lake, IL 60014
(815) 893-5142 (P)
goverbay@civiltechinc.com

Date Prepared: 03 January 2012

Estimated Project Construction Dates:

Start of Construction: 15 April 2012
Completion of Construction: 15 November 2013

Table of Contents

SECTION 1: SITE EVALUATION, ASSESSMENT, AND PLANNING 3
1.1 Project/Site Information 3
1.2 Contact Information/Responsible Parties 4
1.3 Nature and Sequence of Construction Activity 4
1.4 Soils, Slopes, Vegetation, and Current Drainage Patterns 6
1.5 Construction Site Estimates 8
1.6 Receiving Waters 8
1.7 Site Features and Sensitive Areas to be Protected 9
1.8 Potential Sources of Pollution 9
1.9 Endangered Species Certification 9
1.10 Historic Preservation 10
1.11 Maps 10
SECTION 2: EROSION AND SEDIMENT CONTROL BMPS 11
SECTION 3: GOOD HOUSEKEEPING BMPS 22
3.1 Good Housekeeping BMPs 22
3.2 Allowable Non-Stormwater Discharge Management 26
SECTION 4: SELECTING POST-CONSTRUCTION BMPs 28
SECTION 5: INSPECTIONS and MAINTENANCE 29
5.1 Inspections 29
5.2 Maintenance of Controls 29
5.3 Corrective Action Log 29
SECTION 6: RECORDKEEPING and TRAINING 30
6.1 Recordkeeping 30
6.2 Log of Changes to the SWPPP 30
6.3 Training 30
SECTION 7: FINAL STABILIZATION 31
SECTION 8: CERTIFICATION AND NOTIFICATION 32

SWPPP APPENDICES 33
Appendix A - General Location Map
Appendix B – Erosion Control Plan
Appendix C - Copy of Construction General Permit
Appendix D - Copy of NOI and acknowledgement letter from EPA/State
Appendix E - Inspection Reports
Appendix F - Corrective Action Log
Appendix G - Log of Changes and Updates to SWPPP
Appendix H - Subcontractor Certifications/Agreements
Appendix I - Grading and Stabilization Activites Log
Appendix J - SWPPP Training Log
Appendix K - Delegation of Authority Form
Appendix L - Endangered Species and Historic Preservation Documentation
Appendix M - Inspector's Qualifications

SECTION 1: SITE EVALUATION, ASSESSMENT, AND PLANNING

1.1 Project/Site Information

Project/Site Name: New Commissary Facility, NSB New London

Project Street/Location: Intersection of Grayback Avenue and Golet Avenue

City: New London State: Connecticut Zip Code: _____

County or Similar Subdivision: New London County

Latitude/Longitude (Use **one** of three possible formats, and specify method)

Latitude:

1. 41º 23' 29" N (degrees, minutes, seconds)

Longitude:

1. 72º 5' 12" W (degrees, minutes, seconds)

Method for determining latitude/longitude:

☐ USGS topographic map (specify scale: _____) ☒ EPA Web site ☐ GPS

☐ Other (please specify):

Is the project located in Indian country? ☐ Yes ☒ No

If yes, name of Reservation, or if not part of a Reservation, indicate "not applicable." N/A

Is this project considered a federal facility? ☒ Yes ☐ No

NPDES project or permit tracking number: (to be assigned)

(This is the unique identifying number assigned to your project by your permitting authority after you have applied for coverage under the appropriate NPDES construction general permit.)

1.2 Contact Information/ Responsible Parties

Project Information:

Operator:
Defense Commissary Agency (DeCA)
Mr. Richard Baes
2250 Foulois St, Suite 3
Lackland AFB, TX 78236-1039
(210) 671-8421
(richard.baes@deca.mil)

Project Manager or Site Supervisor:
To Be Determined

SWPPP Prepared By:
Civiltech Engineering, Inc.
Gary P. Overbay, P.E.
500 Coventry Lane, Suite 290
Crystal Lake, IL 60014
(815) 893-5142 (P)
goverbay@civiltechinc.com

1.3 Nature and Sequence of Construction Activity

The proposed construction will consist of a new single story building of approximately 58,000 square feet. The new building will be located immediately west of the existing retail connector building that houses the Military Clothing Store on the west side of the existing building that currently contains both the Commissary and Exchange. The existing Commissary/Exchange facility is approximately 63,400 square feet, and is located at the intersection of Grayback Avenue and Golet Avenue within the confines of the NSB New London in New London County, Connecticut. The project site is bounded to the west by Grayling Avenue, to the south by Tang Avenue, to the east by the existing Commissary/Exchange building and parking lot, and to the north by Growler Avenue.

The soil disturbing activity associated with this project will include removal of existing pavement and sidewalk, removing buried railroad ties, some minor stripping of topsoil, installing stabilized construction entrances, installing erosion and sediment control measures, the building construction, reconstructing the parking lots, access roads, a truck loading area, site grading, and excavation for utilities. The site of the new Commissary has been developed a number of times for various uses, and is almost entirely impervious. Due to very limited areas for pervious cover,

a single primary BMP in the form of an infiltration basin will be provided within the force protection setback to the west of the proposed building. There will also be three small rain gardens provided within the customer parking lot. In general, the mass grading to be completed will involve minor cutting and some moderate filling (0-5 feet), construction of the building pad, and parking lot and roadway base courses. After completion of these items, permanent landscape restoration will be installed on all remaining pervious areas which were disturbed during construction.

What is the function of the construction activity?

☐ Residential ☒ Commercial ☐ Industrial ☐ Road Construction

☐ Linear Utility

☐ Other (please specify):_____

Estimated Project Start Date: **15 April 2012**
Estimated Project Completion Date: **15 November 2013**

Construction must be sequenced to minimize the exposure time of cleared surface areas and prevent exposing more than five acres of bare earth at any time. The Contractor is to coordinate the phased work and interface the pollution prevention plan to maintain continuous pollution prevention. Areas of one phase should be stabilized before other phases are initiated. Stabilization shall be accomplished by temporarily or permanently protecting the disturbed soil surface from rain fall impacts and runoff.

1.) Before any construction begins the off-site areas shall be protected with perimeter silt fences, stabilized construction entrances, drop inlet protection and all other erosion control measures indicated in the construction documents. (April 2012)

2.) Construction staging and material storage areas will be established including the construction of the temporary concrete washout area. In addition, the temporary sanitary sewer facilities and dumpsters shall be installed. (April-May 2012)

3.) The initial phase of construction will include demolition of the existing asphalt and concrete pavements and clearing land in the location of the proposed building. Construction in this phase shall also take place in the area of the existing parking lot at the front of the proposed building and along Tang Avenue. (May-November 2012)

4.) Install utilities, sanitary sewer and water connections in this initial phase. (June-October 2012)

5.) Install utilities, sanitary sewer, drainage system and water connections in the area of the second phase. (December 2012-May 2013)

6.) Install pavement subbase and pave parking lot. (May-June 2013)

7.) Finalize grading operations, install final stabilization including permanent seeding and erosion control including final planted areas throughout the site, file NPDES - NOT. (May-July 2013)

8.) Disturbed slopes in excess of 3 horizontal to 1 vertical in areas where construction activity will cease for more than 14 days must be stabilized with erosion blankets and silt fence.

9.) Post Construction: Monitor stabilized areas for three months.

10.) Estimated Beneficial Occupancy Date: 15 November 2013

1.4 Soils, Slopes, Vegetation, and Current Drainage Patterns

Soil type:

Soil borings were performed in October 2008 for a site-specific geotechnical report by GZA GeoEnvironmental, Inc. of Providence, Rhode Island. The report indicates that the subsurface conditions consist primarily of up to 6 feet of granular fill covered mainly by asphalt pavement and underlain by fine sand outwash deposits to depths of 26 feet or more. An NRCS soils report classifies the site as "Urban Land"; in areas adjacent to the site the soil is classified site as "Hollis-Chatfield-Rock outcrop complex", having a hydrologic soil rating of D and Udorthentis, having a hydrologic soil rating of B. Where borings were conducted in existing parking areas, approximately 1 to 5 inches of asphalt concrete was encountered and in fair condition. The granular fill below the paved areas were between 1 and 5 feet thick and can be described as fine to coarse sand. Field tests indicated this fill material was generally medium dense to very dense. The fine sand outwash deposits below the granular were generally in a loose to dense state. Bedrock was encountered in one boring at the northeast corner of the site at a depth of 7 feet below the existing ground. Up to 8 inches of topsoil underlain by 2 to 4 feet of silty subsoil was encountered in the landscaped areas at the northern portion of the site. Groundwater was encountered at most of the boring locations, typically between 6 and 10 feet below existing ground. A groundwater monitoring well measured the groundwater at an approximate elevation of 16.4 feet.

Slopes:

The existing overall topography of the site is relatively flat and generally consists of paved parking areas with slopes varying from 1% to 5%. Current elevations across the site range from 23 to 32 feet, and the site currently drains north to south towards several drainage structures within the existing parking area. The new Commissary building will be constructed approximately 5 feet above existing grade, and upon completion, the site will drain away from the building in each direction, with the majority of grades in paved areas averaging about 2%.

Drainage Patterns:

Storm water from the existing Commissary/Exchange complex is served by an enclosed drainage system that generally drains to the southeast across the main parking lot toward Crystal Lake Avenue and the westerly toward the Thames River. There are a number of smaller subsystems

within the area that divide flow from the area before combining them south of the site. All of the existing storm sewers located in the vicinity of the Commissary/Exchange complex appear to be minimal in size (12" to 15"). This implies that the existing enclosed drainage system may only be capable of accommodating a low intensity storm (estimated at 2-year) within the system. There is no apparent detention currently provided for the Commissary/Exchange complex.

Storm water from the roof area will discharge directly to the infiltration basin proposed along the west side of the new building. A majority of the runoff from the roof will be infiltrated into the sandy soils in this area. Any stormwater not infiltrated will join the runoff from the truck dock of the new Commissary building will be collected in an enclosed drainage system and conveyed to the west and tie-in to the existing enclosed system across Grayling Avenue. Storm water from the parking area will also be collected in the existing enclosed drainage system, with minor changes to drainage structure and sewer locations based on revised parking lot grades.

The new on-site storm sewer system has been designed to accommodate the 5-year storm within the pipes as the size of the downstream drainage system is very limited. Additionally, the site has been graded such that if the storm sewer system fails the 100-year rain will follow its current patterns off of the site without causing damage to any new or existing structure.

Nearly the entire site proposed for construction is currently impervious. The only areas available for detention or storm water quality measures after construction of the new Commissary is in the Force Protection setback to the west of the building and some larger island in the parking lot. There is currently no detention provided for any runoff from the existing Commissary/Exchange complex or any of the building areas which have been cleared by NSB New London to make way for this project. The proposed infiltration basin and rain gardens in the island, while not fully meeting Low Impact Development (LID) guidelines, is a substantially improved situation from that which currently exists.

Vegetation:

Approximately five percent of the site is currently pervious and is covered with vegetation that has an average cover density of approximately 70%. The remainder of the site is impervious area consisting of existing buildings, parking areas, sidewalks, and roads.

The available area to provide landscaping on this project is minimal. The majority of the landscaped areas consist of the parkway areas along the roadways and the islands within the parking lots. There will be the opportunity to provide some decorative planting on either side of the plaza in front of the building. There will also be some ornamental planting provided at the intersections of Grayling Avenue and the front drive aisle and at Tang Avenue and the north-south entry drive. Additionally, plantings will also be provided in and around the proposed infiltration basin. The planting areas around the front entrance of the Commissary and at the entrances are the only areas on-site to be irrigated.

Other:

N/A

1.5 Construction Site Estimates

The following are estimates of the project site characteristics before and after construction:

Construction Site Area to be disturbed	6.5 acres
Total Project Area	7.7 acres
Percentage impervious area before construction	95%
SCS Runoff Curve Number before construction	97
Percentage impervious area after construction	82%
SCS Runoff Curve Number after construction	93

1.6 Receiving Waters

Description of receiving waters:

The state of Connecticut is divided into 5 major watershed basins. NSB New London is located entirely within the Thames Area, encompassing all of eastern Connecticut. It is located within the Thames Main Stem basin of the Thames River watershed as defined by the EPA.

Based on information provided by the Environmental Protection Agency (EPA) and the Connecticut Department of Environmental Protection, there are no Total Maximum Daily Loads (TMDLs) to meet for storm water discharges to the Thames River.

Description of storm sewer systems:

Storm water runoff from the new Commissary building, loading dock, and rear driveway will be directed south and west via new storm sewer to an existing drainage structure west of Grayling Avenue. Runoff from the existing Commissary/Exchange truck dock (adjacent to the eastern wall of the new Commissary building), and the eastern section of the new Commissary parking lot will be directed east to an existing storm sewer system that currently drains the existing Commissary/Exchange complex front parking lot. Runoff from the western section of the parking lot will enter an existing storm sewer system that crosses Tang Avenue to the south.

As stated in Section 1.4 above, the existing enclosed drainage systems on and adjacent to the site may only be capable of accommodating a low intensity storm (2-year). Also, there is no apparent detention currently provided for the Commissary/Exchange complex. The new storm sewer pipes on site have been designed to accommodate a 5-year storm. Additionally, the site has been graded such that if the storm sewer system fails the 100-year rain will follow its current patterns off of the site without causing damage to any new or existing structure.

Description of impaired waters or waters subject to TMDLs: N/A

1.7 Site Features and Sensitive Areas to be Protected

Description of unique features and measures to protect them:

The site does not contain any unique features or sensitive areas to be preserved. There are a small number of trees located within the construction limits that will be preserved. The existing storm drainage structures within the project limits will be protected from sedimentation, erosion control fencing and other BMP's listed in Sections 2 and 4 of this report. The "Erosion Control Plan" is contained in Appendix.

1.8 Potential Sources of Pollution

Potentials sources of sediment to storm water runoff:

- Potential sources of sediment include clearing and grubbing operations, grading and site excavation operations, vehicle tracking, and minor landscaping operations.

Potential pollutants and sources, other than sediment, to storm water runoff:

- Combined staging area including fueling activities, major equipment maintenance, sanitary facilities, and hazardous waste storage.
- Materials storage area including general building materials, solvents, adhesives, paving materials, paints, aggregates, trash.
- Construction activity including paving, curb/gutter installation, concrete pouring/mortar/stucco, building construction.
- Concrete washout areas.

1.9 Endangered Species Certification

Are endangered or threatened species and critical habitats on or near the project area?

☐ Yes ☒ No

- Describe how this determination was made:

  A “State and Federal Listed Species and Natural Communities Map” review as described by the Connecticut Department of Environmental Protection was conducted for the project location in August, 2010. The date of the map was June 2010.

- If yes, describe the species and/or critical habitat: N/A

- If yes, describe or refer to documentation which determines the likelihood of an impact on identified species and/or habitat and the steps taken to address that impact. (Note, if species are present on or near your project site, EPA strongly recommends that the site operator work closely with the appropriate field office of the U.S. Fish and Wildlife Service or National Marine Fisheries Service. Please contact a state or tribal official for concerns related to state or tribal listing of species.): N/A

1.10 Historic Preservation

Are there any historic sites on or near the construction site?

☐ Yes ☒ No

- Describe how this determination was made:

  An Environmental Record of Determination was prepared in 2008 for this project by the SUBASENLON Environmental Division stating that No Historic Sites would be impacted. This assessment was relied upon.

- If yes, describe or refer to documentation which determines the likelihood of an impact on this historic site and the steps taken to address that impact. : N/A

1.11 Maps

These maps include:

- ☒ Direction(s) of stormwater flow and approximate slopes before and after major grading activities
- ☒ Areas and timing of soil disturbance and areas that will not be disturbed
- ☒ Natural features to be preserved
- ☒ Locations of major structural and non-structural BMPs identified in the SWPPP
- ☒ Locations and timing of stabilization measures (see sequence of construction above)
- ☒ Locations of off-site material, waste, borrow, or equipment storage areas
- ☒ Locations of all waters of the U.S., including wetlands
- ☒ Locations where stormwater discharges to a surface water
- ☒ Locations of storm drain inlets
- ☒ Areas where final stabilization has been accomplished

SECTION 2: EROSION AND SEDIMENT CONTROL BMPS

1. Minimize Disturbed Area and Protect Natural Features and Soil:

Topsoil:

Adequate topsoil is not present at the site and will therefore be supplied from an off-site source. Existing grade will be "cut" in the areas of the proposed construction and, usually, immediately removed from the site. When soil is stockpiled before transfer off site, the slope of the stockpile will not exceed 2 horizontal to 1 vertical. The "pervious" areas will be stabilized as specified in Section 7.

Installation Schedule: As noted, most excavated soil will be immediately removed from the site. Silt fence will be placed around any stockpiles that are not immediately removed from the site, to protect the existing drainage ditches and off site areas.

Maintenance and Inspection: The cut and fill areas will be inspected weekly for erosion. These areas will be stabilized immediately with erosion controls or graded to avoid possible disturbance to the existing drainage ditches or off site areas. Maintenance and inspection procedures for silt fence are described in Section 2, part 2.2.

As noted in the "sequence of construction", the proposed improvements will be phased to prevent exposing more than 5 acres of bare earth at any time. All areas of the work site will be stabilized and/or off site discharge prevented if land disturbance activities are not planned for more than 14 days.

Construction Sequence with erosion BMP's are described in Section 1.3

Responsible Staff: To Be Determined

2. Control Stormwater Flowing Onto and Through the Project:

Area for Silt to accumulate:

BMP/Installation Schedule: Before any grading operations begin, silt fence will be installed adjacent to the areas under construction just outside the limits of disturbance. Other adjacent off site areas will always be protected by a silt fence or another BMP until final stabilization is achieved.

Maintenance and Inspection: The graded areas and silt fence will be inspected weekly to ensure that that there are no structural failures and immediately after rain events.

Responsible Staff: To Be Determined

<u>Construction Specifications</u>

Silt Fence

1. The material for silt fences should be a pervious sheet of synthetic fabric such as polypropylene, nylon, polyester, or polyethylene yarn. Choose the material based on the minimum synthetic fabric requirements shown in Table 1.
2. If a standard-strength fabric is used, it can be reinforced with wire mesh behind the filter fabric. This increases the effective life of the fence.
3. The stakes used to anchor the filter fabric should be wood or metal. Wooden stakes should be at least 5 feet long and have a minimum diameter of 2 inches if a hardwood like oak is used. Stakes from soft woods like pine should be at least 4 inches in diameter. When using metal posts in place of wooden stakes, they should weigh at least 1.00 to 1.33 lb/linear foot. If metal posts are used, attachment points are needed for fastening the filter fabric with wire ties.
4. Erect silt fence in a continuous fashion from a single roll of fabric to eliminate gaps in the fence. If a continuous roll of fabric is not available, overlap the fabric from both directions only at stakes or posts. Overlap at least 6 inches. Excavate a trench to bury the bottom of the fabric fence at least 6 inches below the ground surface. This helps to prevent gaps from forming near the ground surface. Gaps would make the fencing useless as a sediment barrier.
5. The height of the fence posts should be 16 to 34 inches above the original ground surface. If standard-strength fabric is used with wire mesh, space the posts no more than 10 feet apart. If extra-strength fabric is used without wire mesh reinforcement, space the posts no more than 5 feet apart.
6. The fence should be designed to withstand the runoff from a 10-year peak storm event. Once installed, it should remain in place until all areas upslope have been permanently stabilized by vegetation or other means.

Physical property	Requirements
Filtering efficiency	75%-85% (minimum): highly dependent on local conditions
Tensile strength at 20% (maximum) Elongation	Standard strength: 30 lb/linear inch (minimum) Extra strength: 50 lb/linear inch (minimum)
Ultraviolet radiation	90% (minimum)
Slurry flow rate	0.3 gal/ft^2/min (minimum)

Table 1
Minimum requirements for silt fence construction
(Sources: USEPA, 1992; VDCR, 1995)

<u>Maintenance</u>

1. Sediment should be removed once it has accumulated to one-third to one-half the original height of the barrier.

2. Filter fabric should be replaced whenever it has deteriorated to such an extent that the effectiveness of the fabric is reduced (approximately six months).
3. Silt fence should remain in place until disturbed areas have been permanently stabilized.
4. All sediment accumulated at the fence should be removed and properly disposed of before the fence is removed.

Inspection

1. Inspect silt fence before anticipated storm events (or series of storm events such as intermittent showers over one or more days) and within 24 hours after the end of a storm event of 0.5 inches or greater, and at least twice every seven calendar days, at least 72 hours apart.
2. Where sites have been finally or temporarily stabilized, such inspections may be conducted only once per month.

3. Stabilize Soils:

Temporary Stabilization:

BMP Description: Hydromulching will be used on slopes where construction will cease for more than 14 days and over the winter months to stabilize erodible materials. Straw mulch and wood fiber will be mixed with a tackifier and applied uniformly by machine with an application rate of 2 tons (100-200 bales) per acre. The contractor will use crimping equipment to bind the mulch to the soil if the tackifier is not effective. Netting will be used on small areas with steep slopes. In acres where hydromulching is inaccessible, straw mulch will be applied by hand at the same application rate.

Temporary Seeding will be used on any area where construction activity is suspended for more than twenty-one days to stabilize erodible materials. Refer to the Erosion Control Plan for guidance on seeding mixtures, rates, and acceptable planting dates for temporary seeding.

Installation Schedule: Portions of the site where construction activities will temporarily cease for more than 14 days will be stabilized with mulch. Where construction activities will temporarily cease for more than 21 days will be temporary seeded. Winter stabilization will occur between December 25 and March 30.

Maintenance and Inspection: Mulched areas will be inspected weekly to ensure that adequate coverage is provided. Repairs will be conducted as needed.

Responsible Staff: To Be Determined

Permanent Stabilization:

Permanent stabilization will be completed within 14 days after the site is brought to its final grades in accordance with the procedures detailed in Section 7.

Maintenance and Inspection: All areas will be inspected weekly during construction for failure until a dense vegetation cover has been established.

Responsible Staff: To Be Determined

Dust Control:

Dust from the site will be controlled by using a mobile pressure-type distributor truck that will apply potable water at rate of 300 gallons per acre and minimized as needed to avoid ponding.

Installation Schedule: dust control will be implemented as needed once site grading has been initiated, and during windy conditions exceeding 20mph, while site grading is occurring. Spraying of potable water will be performed no more than three times per day during the months of March through May and once per day from June to September or whenever dryness of soil warrants it.

Maintenance Schedule: At least one mobile unit will be available at all times during construction to apply potable water. Each mobile unit shall be equipped with a positive shutoff valve to prevent over watering of disturbed areas.

Responsible Staff: To Be Determined

4. Protect Slopes:

Erosion Control Blanket:

BMP Description: Erosion control blankets will be used to provide stabilization on steep (3H:1V or greater) interior side slopes and immediate stabilization for swales . The blanket shall cover the entire graded side slopes. The side slopes shall be seeded and mulched before the blanket is applied. The blanket shall be installed in a 12 inch wide by 6 inch deep trench in the upside of the slope, and stapling the leading edge of the blanket in the trench. The blanket shall be rolled down the slope slowly to maintain soil contact and stapled at 12 inch intervals. The blankets can be overlapped a minimum of 2 inches and stapled at the overlapping edge. See appendix for design installations.

Installation Schedule: The erosion control blankets will be installed after grading of the side slopes and swales is complete.

Responsible Staff: To Be Determined

Construction Specifications

Erosion Control Blanket

1. Biodegradable rolled erosion control products (RECPs) are typically composed of jute fibers, curled wood fibers, straw, coconut fiber, or a combination of these materials. In order for an RECP to be considered 100% biodegradable, the netting, sewing or adhesive system that holds the biodegradable mulch fibers together must also be biodegradable.
   - *Jute* is a natural fiber that is made into a yarn that is loosely woven into a biodegradable mesh. It is designed to be used in conjunction with vegetation and has longevity of approximately one year. The material is supplied in rolled strips, which should be secured to the soil with U-shaped staples or stakes in accordance with manufacturers' recommendations.
   - *Excelsior* (curled wood fiber) blanket material should consist of machine produced mats of curled wood excelsior with 80 percent of the fiber 6 in. or longer. The excelsior blanket should be of consistent thickness. The wood fiber must be evenly distributed over the entire area of the blanket. The top surface of the blanket should be covered with a photodegradable extruded plastic mesh. The blanket should be smolder resistant without the use of chemical additives and should be non-toxic and non-injurious to plant and animal life. Excelsior blankets should be furnished in rolled strips, a minimum of 48 in. wide, and should have an average weight of 0.8 lb/yd2, ±10 percent, at the time of manufacture. Excelsior blankets must be secured in place with wire staples. Staples should be made of minimum 11 gauge steel wire and should be U-shaped with 8 in. legs and 2 in. crown.
2. Grade and shape the area of installation.
3. Remove all rocks, clods, vegetation or other obstructions so that the installed blankets or mats will have complete, direct contact with the soil.
4. Prepare seedbed by loosening 2 to 3 in. of topsoil.
5. Seed the area before blanket installation for erosion control and revegetation.
6. Seeding after mat installation is often specified for turf reinforcement application. When seeding prior to blanket installation, all check slots and other areas disturbed during installation must be re-seeded. Where soil filling is specified, seed the matting and the entire disturbed area after installation and prior to filling the mat with soil.
7. Fertilize and seed in accordance with seeding specifications or other types of landscaping plans. When using jute matting on a seeded area, apply approximately half the seed before laying the mat and the remainder after laying the mat. The protective matting can be laid over areas where grass has been planted and the seedlings have emerged. Where vines or other ground covers are to be planted, lay the protective matting first and then plant through matting according to design of planting.
8. Check slots are made of glass fiber strips, excelsior matting strips or tight folded jute matting blanket or strips for use on steep, highly erodible watercourses. The check slots are placed in narrow trenches 6 to 12 in. deep across the channel and

left flush with the soil surface. They are to cover the full cross section of designed flow.

9. Before laying the matting, all check slots should be installed and the friable seedbed made free from clods, rocks, and roots. The surface should be compacted and finished according to the requirements of the manufacturer's recommendations.
10. Mechanical or manual lay down equipment should be capable of handling full rolls of fabric and laying the fabric smoothly without wrinkles or folds. The equipment should meet the fabric manufacturer's recommendations or equivalent standards.
11. Anchor and install as detailed in the Erosion Control Plan.

Maintenance

1. Areas where erosion is evident shall be repaired and BMPs reapplied as soon as possible. Care should be exercised to minimize the damage to protected areas while making repairs, as any area damaged will require reapplication of BMPs
2. If washout or breakage occurs, re-install the material after repairing the damage to the slope or channel.
3. Make sure matting is uniformly in contact with the soil.
4. Check that all the lap joints are secure, the staples are flush with the ground, and that disturbed areas are seeded.

Inspection

1. Inspect Erosion Control Blankets prior to forecast rain, daily during extended rain events, after rain events, weekly during the rainy season, and at two-week intervals during the non-rainy season.
2. Inspect Erosion Control Blankets subject to non-stormwater discharges daily while non-stormwater discharges occur.

5. Protect Storm Drain Inlets:

Drop Inlet Protection:

BMP Description: The proposed on-site storm drain inlets will be protected with Silt Filter Fence, Gravel and Wire Mesh, Block and Gravel, or a Filter Fabric Insert as detailed in the Erosion Control Plan as soon as these facilities are installed. Stabilized base course shall be installed in the parking areas within four weeks after the inlets are installed to limit conveyance of silt to the inlets. Any existing storm drain inlets are to be protected similarly if receiving runoff from unstabilized areas. It will not be necessary to install inlet protection devices for existing inlets on Martinez St., Coleman Ave. and Sheridan Ave., since these structures are isolated from the project.

Responsible Staff: To Be Determined

Construction Specifications

Drop Inlet Protection

1. Silt Fence Drop Inlet Protection
   a. Silt Fence shall conform to the construction specifications for "extra strength" found in Table 1 and shall be cut from a continuous roll to avoid joints.
   b. For stakes, use 2 x 4-inch wood (preferred) or equivalent metal with a minimum length of 3 feet.
   c. Space stakes evenly around the perimeter of the inlet a maximum of 3-feet apart, and securely drive them into the ground, approximately 18-inches deep.
   d. To provide needed stability to the installation, frame with 2 x 4-inch wood strips around the crest of the overflow area at a maximum of 1-1/2 feet above the drop inlet crest.
   e. Place the bottom 12 inches of the fabric in a trench and backfill the trench with 12 inches of compacted soil.
   f. Fasten fabric securely by staples or wire to the stakes and frame. Joints must be overlapped to the next stake.
   g. It may be necessary to build a temporary dike on the downslope side of the structure to prevent bypass flow.

2. Gravel and Wire Mesh Drop Inlet Sediment Filter
   a. Wire mesh shall be laid over the drop inlet so that wire extends a minimum of 1 foot beyond each side of the inlet structure. Wire mesh with 1/2-inch openings shall be used. If more than one strip of mesh is necessary, the strips shall be overlapped.
   b. Coarse aggregate shall be placed over the wire mesh as indicated on Sheet C1.2. The depth of stone shall be at least 12 inches over the entire inlet opening. The stone shall extend beyond the inlet opening at least 18 inches on all sides.
   c. If the stone filter becomes clogged with sediment so that it no longer adequately performs its function, the stones must be pulled away from the inlet, cleaned and/or replaced.

   Note: This filtering device has no overflow mechanism; therefore, ponding is likely especially if sediment is not removed regularly. This type of device must never be used where overflow may endanger an exposed fill slope.

3. Block and Gravel Drop Inlet Sediment Filter
   a. Place concrete blocks lengthwise on their sides in a single row around the perimeter of the inlet, with the ends of adjacent blocks abutting. The eight of the barrier can be varied, depending on design needs, by stacking combinations of 4-inch, 8-inch and 12-inch wide blocks. The barrier of blocks shall be at least 12-inches high and no greater than 24-inches high.

b. Wire mesh shall be placed over the outside vertical face (webbing) of the concrete blocks to prevent stone from being washed through the holes in the blocks. Wire mesh with ½-inch openings shall be used.
c. Stone shall be placed against the wire to the top of the block barrier, as shown on Sheet C1.2.
d. If the stone filter becomes clogged with sediment so that it no longer adequately performs its function, the stone must be pulled away from the blocks, cleaned and replaced.

4. Filter Fabric Insert: Follow specifications described by the product manufacturer for effective installation. A detail for the Dandy Bag® II is included in the Erosion Control Plan as an example of an acceptable filter.

Maintenance

1. Sediment should not be allowed to wash into the storm drain inlet. It should be removed from the inlet protection and disposed of and stabilized so that it will not enter the inlet again.
2. When contributing drainage area has been permanently stabilized, all materials and any sediment should be removed, and either salvaged or disposed of properly.
3. Expected life of a silt fence barrier is 3 months. Maintenance needs and repairs should be accomplished immediately should the inlet protection fail.

Inspection

1. Inspections of storm drain inlet protection methods should be made before anticipated storm events (or series of storm events such as intermittent showers over one or more days) and within 24 hours after the end of a storm event of 0.5 inches or greater, and at least twice every seven calendar days, at least 72 hours apart.
2. Where sites have been finally or temporarily stabilized, such inspections may be conducted only once per month.

6. Establish perimeter controls and sediment barriers:

Silt Fence:

BMP Description/Installation: As noted above, before any grading operations begin, silt fence will be installed adjacent to the areas under construction, just outside the limits of disturbance. Silt fence may also be used for storm drain inlet protection as detailed in Section 2.5 of this report.

Responsible Staff: To Be Determined

7. Retain Sediment On-Site and Control Dewatering Practices:

Dewatering:

BMP Description/Installation: In the event groundwater is encountered during instruction, dewatering may be required through the use of sump pumps. Installation of sumps shall follow the requirements of the Sump Pit detail as provided in the Erosion Control Plan. The purpose of this practice is to remove excessive water from excavations in a manner that improves the quality of the water being pumped.

Construction Specifications

Sump Pit

1. A perforated vertical standpipe shall be placed in the center of the pit to collect filtered water. The standpipe shall be a perforated corrugated metal or PVC pipe and its diameter and number of perforations shall be compatible with the pump size being used.
2. Water is then to be pumped from the center of the pipe to a suitable discharge area.
3. The pit shall be filled with crushed stone or gravel no smaller than CT DOT #67 size nor larger than CT DOT #3 size. Crushed stone shall extend a minimum of 12" below the bottom of the standpipe.
4. Discharge of water pumped from the standpipe shall be to a suitable practice such as a Portable Sediment Tank, or a stabilized area.
5. If water from the sump pit will be pumped directly to a storm drainage system, filter fabric will be wrapped around the standpipe to ensure clean water discharge.
6. It is recommended that 1/4 to 1/2 inch hardware cloth wire be wrapped around and secured to the standpipe prior to attaching the filter fabric. This will increase the rate of water seepage into the standpipe.

Maintenance

1. Replace the sump pit if the pit and filter fabric plugs with sediment.

Responsible Staff: To Be Determined

8. Establish Stabilized Construction Exits:

Stabilized Construction Exit:

BMP Description/Installation: A stabilized construction exit shall be installed at the entrance and exit to the job site before construction begins (the staging and on site construction parking area is in an existing asphalt area). Stabilized exits are used to prevent the off-site transport of sediment by construction vehicles. At the entrance and exits to the site, the VTP shall be at least 25 ft wide or at least the width of the entrance or exist, whichever is greater. The crushed stone for the VTP at the entrance or exit shall be placed over a layer of geotextile. For additional details see the Erosion Control Plan.

Responsible Staff: To Be Determined

Construction Specifications

Stabilized Construction Exit

1. The width should be at least 14 ft but not less than the full width of points where ingress or egress occurs. At sites where traffic volume is high, the entrance should be wide enough for two vehicles to pass safely. Flare the entrance where it meets the existing road to provide a sufficient turning radius.
2. The minimum length should be 50 ft.
3. Total depth of rock should be at least 6 inches. Fractured stone 2 to 8 in. diameter (for the base layer) and crushed stone 2 in. diameter or reclaimed or recycled concrete equivalent (for the top layer).
4. Include geotextile (filter fabric) with the products placed over the entire area to be covered with aggregate. The geotextile should be a woven or nonwoven fabric consisting only of continuous chain polymeric filaments or yarns of polyester. The geotextile should be inert to commonly encountered chemicals, hydrocarbons, mildew, and rot resistant.
5. Runoff from a stabilized construction entrance should drain to a sediment trap or protected inlet.
6. Clear all vegetation, roots, and all other obstructions in preparation for grading. Prior to placing geotextile (filter fabric), make sure that the entrance is properly graded and compacted.

Maintenance

1. The entrance should be maintained in a condition that will prevent tracking or flow of mud onto public rights-of-way. This may require periodic top dressing with additional 2 in. stone (as conditions demand) and repair or cleaning of any structures used to trap sediment.
2. All materials spilled, dropped, washed, or tracked from vehicles onto roadways or into storm drains should be removed immediately. When necessary, vehicle wheels should be cleaned to remove sediment prior to entrance onto public rights-of-way. When washing is required, it should be done on an area stabilized with aggregate that drains into an approved sediment trap or protected inlet.
3. Trapped sediment should be removed from the site or stabilized on site and prevented from entering storm drains, ditches, or waterways. Disturbed soil areas resulting from removal should be permanently stabilized.
4. The stabilized construction entrance may be removed after final site stabilization is achieved or after the temporary BMPs are no longer needed.

Inspection

1. Inspect and verify that activity-based BMPs are in place prior to the commencement of associated activities.
2. While activities associated with the BMPs are under way, and at least twice every seven calendar days, at least 72 hours apart.

3. Inspect local roads adjacent to the site daily. Sweep or vacuum to remove visible accumulated sediment.

9. Additional BMPs:

N/A

SECTION 3: GOOD HOUSEKEEPING BMPS

3.1 Good Housekeeping BMPs (from EPA Website)

1. Material Handling and Waste Management:

Waste Materials:

All waste materials will be collected and disposed of into three metal waste dumpsters in the materials storage area. Dumpsters will have a secure tight lid, be placed away from storm water drains and structures, and will meet all federal, state, county, and local regulations. Only trash and construction debris will be placed in the dumpsters. Construction materials will not be buried on site. All personal will be instructed, during tailgate training sessions, regarding the correct disposal of trash and construction debris. Notices that state these practices will be posted in the office trailer and the individual who manages day-to-day site operations will be responsible for seeing that these practices are followed.

Installation Schedule: Trash dumpsters will be installed when the materials storage area has been established.

Maintenance and Inspection: The dumpsters will be inspected weekly and immediately after storm events. The dumpster will be emptied weekly, or more frequently if needed, and taken to the appropriate landfill.

Hazardous Waste Materials:

BMP Description: All hazardous waste materials including oil filters, petroleum products, paint, and equipment maintenance fluids will be stored in structurally sound and sealed shipping containers, within the hazardous materials storage area. Hazardous waste materials will be stored in appropriate and clearly marked containers and segregated from other non-waste materials. Secondary containment will be provided for all waste materials in the hazardous materials storage area and will consist of commercially available spill pallets. Additionally, all hazardous waste materials will be disposed of in accordance with federal, state, county, and local regulations. Hazardous waste materials will not be disposed of into the on-site dumpsters. All personnel will be instructed, during tailgate training sessions, regarding proper procedures for hazardous waste disposal. Notices that state these procedures will be posted in the office trailer and the individual who manages day-to-day site operations will be responsible for seeing that these procedures are followed.

Installation Schedule: Shipping containers used to store hazardous waste materials will be installed once the site materials storage area has been installed.

Maintenance and Inspection: The hazardous waste materials area will be inspected weekly and after storm events. The storage area will be kept clean, well organized and equipped with ample cleanup supplies as appropriate for the materials being stored. Material safety datasheets, material inventory, and emergency contact numbers will be maintained in the office trailer.

Responsible Staff: To Be Determined

Sanitary Waste:

BMP Description: Two portable toilets, located in the staging area, will be provided at the site throughout the construction phase. The toilets will be anchored as approved by the stormwater inspector and located away from concentrated drainage flow paths and will have collection pans underneath as secondary containment.

Installation schedule: The portable toilets will be set up at the site when the staging area is complete.

Maintenance and Inspection: Sanitary waste will be collected a minimum of three times a week and shall be inspected weekly for evidence of leaking holding tanks.

Responsible Staff: To Be Determined

Recycling:

BMP Description: Wood pallets, cardboard boxes, and other recyclable construction scraps will be disposed of in a designated dumpster for recycling. The dumpster will have a secure watertight lid, be placed away from stormwater conveyances and drains and meet all local and state solid-waste management regulations. Only solid recyclable construction scraps from the site will be deposited in the dumpster. All personnel will be instructed, during tailgate training sessions, regarding the correct procedure for disposal of recyclable construction scraps. Notices that state these procedures will be posted in the office trailer, and the individual who manages day-to-day site operations will be responsible for seeing that these procedures are followed.

Installation Schedule: Designated recycling dumpsters will be installed once the combined staging area has been established.

Maintenance and Inspection: The recycling dumpster will be inspected weekly. The recycling dumpster will be emptied weekly and taken to an approved recycling center by the contractor. If recyclable construction wastes are exceeding the dumpster's capacity, the dumpsters will be emptied more frequently.

Responsible Staff: To Be Determined

2. Establish Proper Building Material Staging Areas:

Materials Storage Area:

BMP Description: Construction equipment and maintenance materials will be stored at the combined staging area and materials storage areas. This area will be located in an existing paved area on the southeast section of the property. Hale Bales shall be installed around the perimeter of the area. A watertight shipping container will be used to store hand tools, small parts, and other construction materials. Non-hazardous building materials such as packaging material (wood, plastic, and glass), and construction scrap material (brick, wood, steel, metal scraps, and pipe cuttings) will be stored in a separate covered storage facility adjacent to the shipping container. All hazardous-waste materials such as oil filters, petroleum products, paint, and equipment maintenance fluids will be stored in structurally sound and sealed containers under cover within the hazardous materials. Very large items, such as framing materials and stockpiled lumber, will be stored in the open in the materials storage area. Such materials will be elevated on wood blocks to minimize contact with runoff.

Installation Schedule: The materials storage area will be installed immediately and before any grading occurs or before any infrastructure is constructed at the site.

Maintenance and Inspection: The storage area will be inspected weekly. The storage area will be kept clean, well organized, and equipped with ample cleanup supplies as appropriate for the materials being stored. Perimeter controls, containment structures, covers, and liners will be repaired or replaced as needed to maintain proper function.

Responsible Staff: To Be Determined

3. Designate Washout Areas:

Concrete Washout

BMP Description: A designated temporary, above-grade concrete washout area will be constructed as detailed on the site map. The temporary concrete washout area will be constructed as shown on the Erosion Control Plan, with a recommended minimum length and minimum width of 10 feet, but with sufficient quantity and volume to contain all liquid and concrete waste generated by washout operations. The washout area will be lined with plastic sheeting at least 10 mils thick and free of holes or tears. Signs will be posted marking the location of the washout area to ensure that concrete equipment operators use the proper facility.

Concrete pours will not be conducted during or before an anticipated storm event. Concrete mixer trucks and chutes will be washed in the designated area or concrete wastes will be properly disposed of off-site. When the temporary washout area is no longer needed for the construction project, the hardened concrete and materials used to construct the area will be removed and disposed of according to the maintenance section below, and the area will be stabilized. For design specifications, see appendix.

Installation Schedule: The washout area will be constructed before concrete pours occur at the site.

Maintenance and Inspection: The washout areas will be inspected weekly and each day of use to ensure that all concrete washing is being discharged into the washout area, no leaks or tears are present, and to identify when concrete wastes need to be removed. The washout areas will be cleaned out once the area is filled to 75 percent of the holding capacity. Once the area's holding capacity has been reached, the concrete wastes will be allowed to harden; the concrete will be broken up, removed, and taken to the appropriate landfill for disposal. The plastic sheeting will be replaced if tears occur during removal of concrete wastes from the washout area.

Responsible Staff: To Be Determined

4. Establish proper equipment/vehicle fueling and maintenance practices:

Vehicle/Equipment Fueling and Maintenance:

BMP Description: Several types of vehicles and equipment will be used on-site throughout the project, including graders, scrapers, excavators, loaders, paving equipments, rollers, trucks and trailers, backhoes, and forklifts. All major equipment/vehicle fueling and maintenance will be performed off-site. A small, 20 gallon pickup bed fuel tank will be kept on-site in the combined staging area. When vehicle fueling must occur on-site, the fueling activity will occur in the staging area. Only minor equipment maintenance will occur on-site. All equipment fluids generated from maintenance activities will be disposed of into designated drums stored on spill pallets in accordance with Part 3.1. Absorbent, spill-cleanup materials and spill kits will be available at the combined staging and materials storage area. Drip pans will be placed under all equipment receiving maintenance and vehicles and equipment parked overnight.

Installation Schedule: BMPs implemented for equipment and vehicle maintenance and fueling activities will begin at the start of the project.

Maintenance and Inspection: Inspect equipment/vehicle storage areas and fuel tank weekly. Vehicles and equipment will be inspected on each day of use. Leaks will be repaired immediately, or the problem vehicle(s) or equipment will be removed from the project site. Keep ample supply of spill-cleanup materials on-site and immediately clean up spills and dispose of materials properly.

Responsible Staff: To Be Determined

5. Allowable non-stormwater discharges and control equipment/vehicle washing:

BMP Description: All equipment and vehicle washing will be performed off-site. (See section 3.2 below for additional information related to non-storm water discharges)

6. Spill Prevention and Control Plan:

Spill Prevention and Control Procedures:

BMP Description:

1. Employee Training: All employees will be trained via biweekly tailgate sessions, as detailed in Section 6, Part 6.3.
2. Vehicle Maintenance: Vehicles and equipment will be maintained off-site. All vehicles and equipment including subcontractor vehicles will be checked for leaking oil and fluids. Vehicles leaking fluid will not be allowed on-site. Drip pans will be placed under all vehicles and equipment that are parked overnight.
3. Hazardous Material Storage: Hazardous materials will be stored in accordance with Section 3, Part 1 and federal and municipal regulations.
4. Spill Kits: Spill kits will be stored within the material storage area and concrete washout areas.
5. Spills: All spills will be cleaned up immediately upon discovery. Spent absorbent materials and rags will be hauled off-site immediately after the spill is cleaned up for disposal at the appropriate landfill. Spills large enough to discharge to surface water will be reported to the National Response Center at 1-800-424-8802.
6. Material safety data sheets, a material inventory, and emergency contact information will be maintained at the on-site project trailer.

Installation Schedule: The spill prevention and control procedures will be implemented once construction begins on-site.

Maintenance and Inspection: All personnel will be instructed, during tailgate training sessions, regarding the correct procedures for spill prevention and control. Notices that state these practices will be posted in the office trailer, and the individual who manages day-to-day site operations will be responsible for seeing that these procedures are followed.

Responsible Staff: To Be Determined

7. Any Additional BMPs:

N/A

3.2 Allowable Non-Stormwater Discharge Management

Items include: discharges from fire fighting activities, fire hydrant flushing, landscape watering, water used to control dust, wash downs with potable water that does not include detergents. Dewatering of foundation and utility trenches is not anticipated. All erosion control practices shall be followed by the contractor in connection with these activities.

Irrigation waters will be sprayed onto landscape areas only. The sprinklers will have low flow rates and increased watering time. The irrigation area will be inspected regularly for excess watering and if needed, adjustments will be made.

Any changes in construction activities that produce other allowable non-storm water discharges will be identified, and the SWPPP will be amended and the appropriate erosion and sediment control will be implemented.

Responsible Staff: To Be Determined

SECTION 4: SELECTING POST-CONSTRUCTION BMPs

There is an insufficient amount of area available for the installation of adequate post-construction BMP to fully mitigate runoff from the completed project. The only significant area open area is within the AT/FP setback along the west face of the new Commissary, which is at the highest point of the site. An infiltration basin is being proposed in this setback, but the only water which can be made tributary to this basin is the runoff from the building's roof. Based upon the underlying soils in the area of the basin area, it appears that most of the roof runoff can be infiltrated in moderate storms.

There is also the possibility to create some smaller rain gardens within the customer parking lot. A portion of the runoff from the parking lot can be directed to these area to further mitigate runoff from the site.

SECTION 5: INSPECTIONS and MAINTENANCE

5.1 Inspections

1. Inspection Personnel:

- To Be Determined

2. Inspection Schedule and Procedures:

- See Sections 2 and 3.
- See Appendix E for a sample Inspection Report

5.2 Maintenance of Controls

Maintenance Procedures: See Sections 2 and 3.

5.3 Corrective Action Log

Corrective Action Log: See Appendix F for a sample Corrective Action Log

SECTION 6: Recordkeeping and Training

6.1 Recordkeeping

The following is a list of records that should be kept at the project site available for inspectors to review:

- Dates of grading, construction activity (and stabilization – see Section 7).
- Copy of the construction general permit (see Appendix C).
- The signed and certified NOI form or permit application form (see Appendix D).
- Inspection reports (see Appendix E).
- Records relating to endangered species and historic preservation (see Appendix M).

Dates when major grading activities occur:

- See construction sequence in Section 1 of this report.

Dates when construction activities temporarily or permanently cease on a portion of the site

- See construction sequence in Section 1 of this report.

See Appendix I for a sample Grading and Stabilization Activities Log

6.2 Log of Changes to the SWPPP

Log of changes and updates to the SWPPP

- See Appendix G for a SWPPP Amendment Log

6.3 Training

- General stormwater and BMP awareness training for staff and subcontractors is described in Section 2 and 3 of this report. Further supporting information can be found in the 2002 Connecticut Guidelines for Soil Erosion and Sediment Control.

- Detailed training for staff and subcontractors with specific stormwater responsibilities is also contained in Section 2 and 3 of this report. Additional information can be found in the National Menu of Stormwater Best Management Practices by the U.S. Environmental Protection Agency's National Pollutant Discharge Elimination System: < http://cfpub.epa.gov/npdes/stormwater/menuofbmps/index.cfm>

Individual(s) Responsible for Training:

- To Be Determined

SECTION 7: FINAL STABILIZATION

Permanent seeding should be applied immediately after the final design grades are achieved at the site but no later than 14 days after construction activities have permanently ceased. After the entire site is stabilized, any sediment that has accumulated will be removed and hauled off site to a licensed landfill facility. Construction debris, trash, and temporary BMP's will also be removed and any areas disturbed during removal will be seeded immediately.

Seedbed Preparation:

1. Topsoil will be spread over final graded areas at a minimum depth of four inches.
2. The seedbed will be free of rocks, woody debris and other objectionable material.
3. Fertilizer will be applied to the seedbed as needed. Fertilizers will be commercial type of uniform composition, free-flowing and conforming to the applicable State and Federal laws. Choose native species that are adapted to local weather and soil conditions wherever possible to reduce water and fertilizer inputs and lower maintenance overall.
4. Topsoil will be loosened by raking, tilling or other suitable methods.

Refer to the Site Landscape Plan for proposed vegetation locations and plant/seed lists for the new Commissary site. See the Vegetative Soil Cover guidelines located in Chapter 5, Section 3 of the 2002 Connecticut Guidelines for Soil Erosion and Sediment Control* for additional guidance and specifications relating to seeding, fertilizer, mulching, and sodding.

Final stabilization should be installed on portions of the site where construction activities have permanently ceased will be stabilized, as soon as possible but no later than 14 days after construction ceases.

All seeded areas will be inspected weekly during construction activities for failure until a dense cover of vegetation has been established. If failure is noticed on the seeded area, the area will be seeded, fertilized and mulched immediately. After construction is complete at the site permanent stabilization measures will be monitored until final stabilization is reached.

Responsible Staff: To Be Determined (during construction); NSB New London personnel (after construction).

A Notice of Termination (NOT) will be submitted after all cleanup at the site is complete and after all seeding, fertilizing and mulching operations are complete and all plants are installed.

*Document can be found online at: <http://www.ct.gov/dep/cwp/view.asp?A=2720&Q=325660>

SECTION 8: CERTIFICATION AND NOTIFICATION

I certify under penalty of law that this document and all attachments were prepared under my direction or supervision in accordance with a system designed to assure that qualified personnel properly gathered and evaluated the information submitted. Based on my inquiry of the person or persons who manage the system, or those persons directly responsible for gathering the information, the information submitted is, to the best of my knowledge and belief, true, accurate, and complete. I am aware that there are significant penalties for submitting false information, including the possibility of fine and imprisonment for knowing violations.

Name: _____ Title: _____

Signature: _____ Date: _____

I certify under penalty of law that this document and all attachments were prepared under my direction or supervision in accordance with a system designed to assure that qualified personnel properly gathered and evaluated the information submitted. Based on my inquiry of the person or persons who manage the system, or those persons directly responsible for gathering the information, the information submitted is, to the best of my knowledge and belief, true, accurate, and complete. I am aware that there are significant penalties for submitting false information, including the possibility of fine and imprisonment for knowing violations.

Name: _____ Title: _____

Signature: _____ Date: _____

SWPPP APPENDICES

Attach the following documentation to the SWPPP:

Appendix A - General Location Map

Appendix B - Site Maps (Erosion Control Plan & Details, Stormwater Management Concept Plan)

Appendix C - Copy of Construction General Permit

Appendix D - Copy of NOI and acknowledgement letter from EPA/State

Appendix E - Inspection Reports

Appendix F - Corrective Action Log

Appendix G - Log of Changes and Updates to SWPPP

Appendix H - Subcontractor Certifications/Agreements

Appendix I - Grading and Stabilization Activities Log

Appendix J - SWPPP Training Log

Appendix K - Delegation of Authority Form

Appendix L - Endangered Species and Historic Preservation Documentation

Appendix M - Inspector's Qualifications

APPENDIX A: GENERAL LOCATION MAP

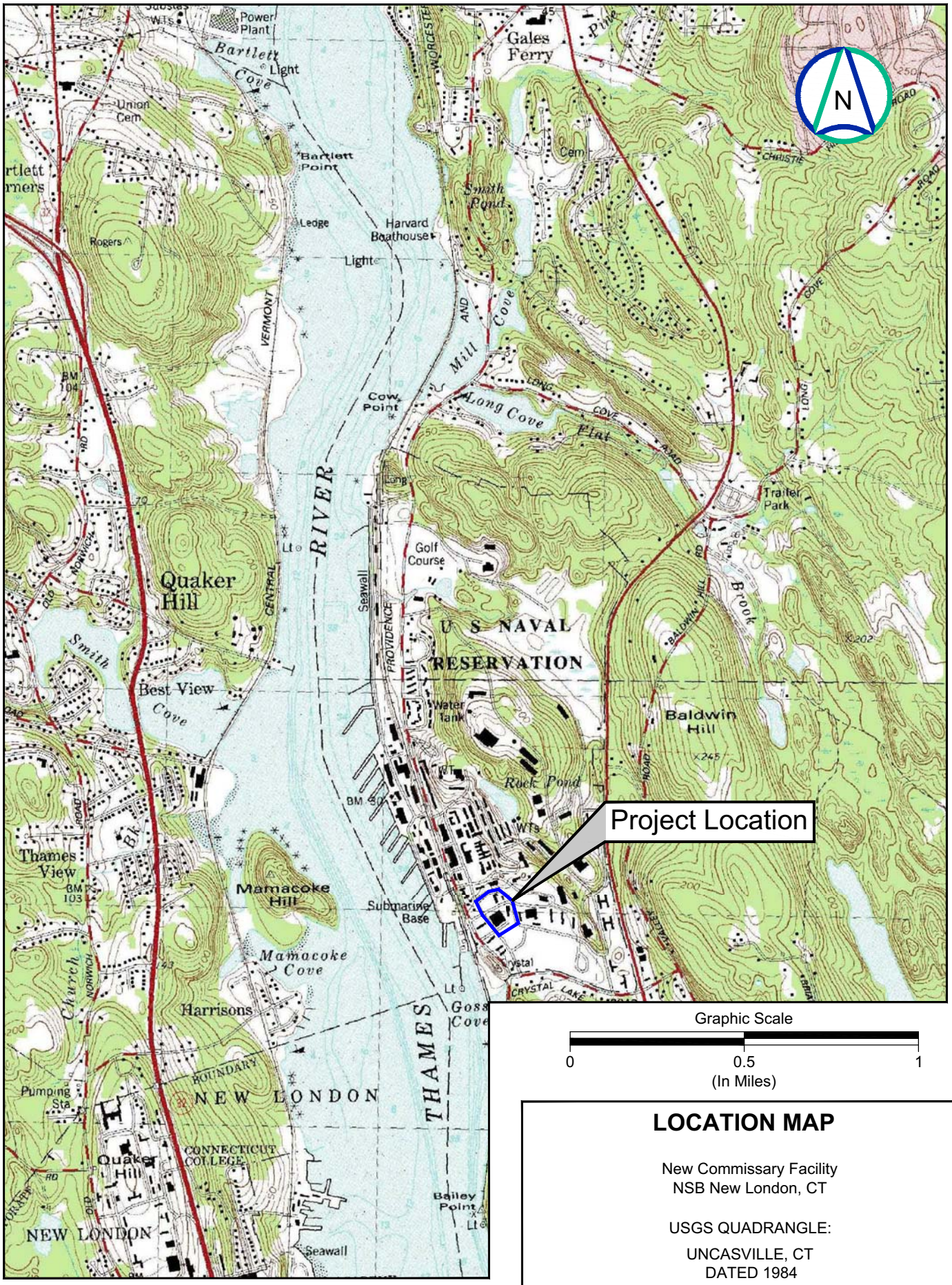

LOCATION MAP

New Commissary Facility
NSB New London, CT

USGS QUADRANGLE:

UNCASVILLE, CT
DATED 1984

APPENDIX B: SITE MAPS

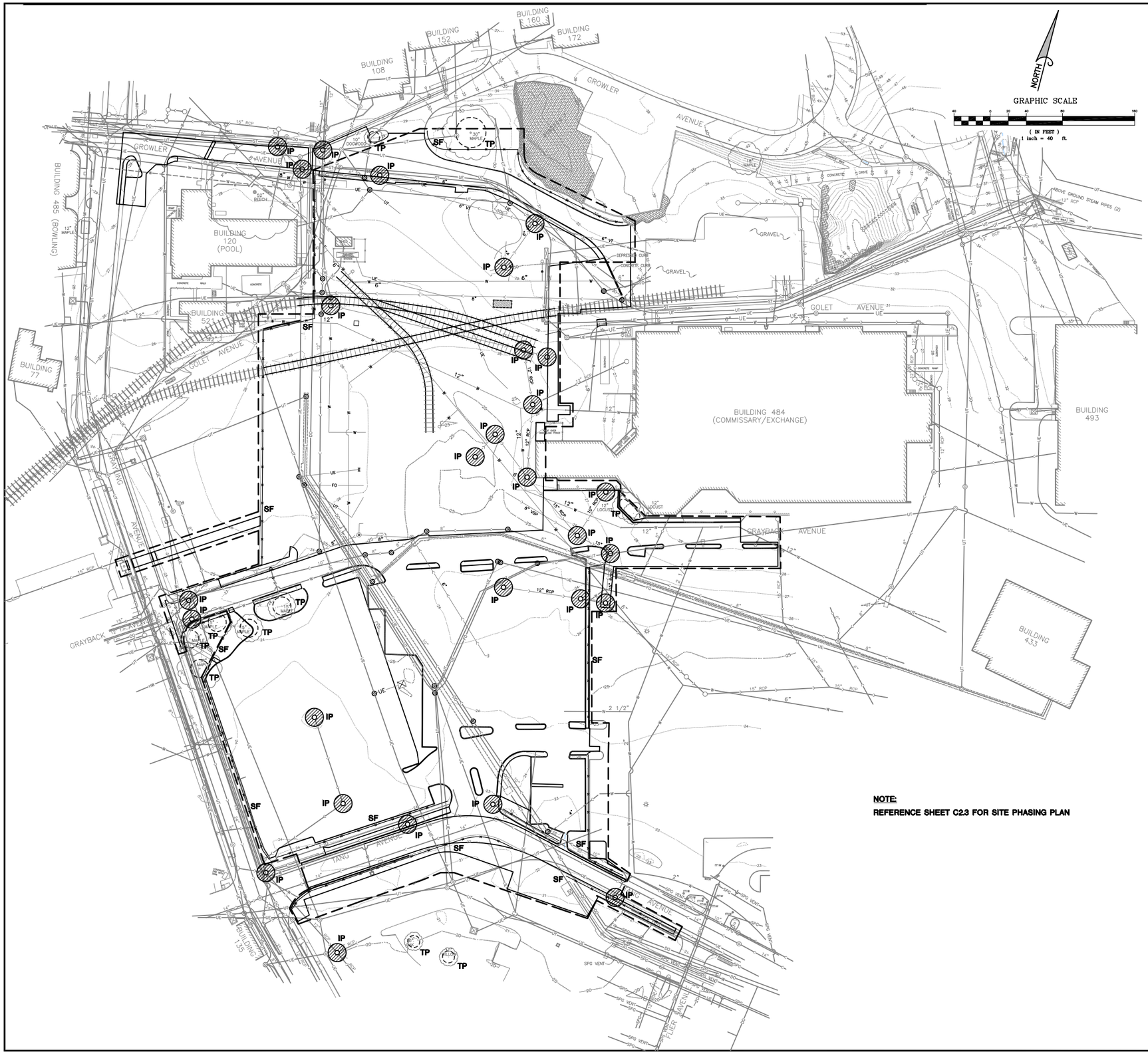

NOTE:

REFERENCE SHEET C2.3 FOR SITE PHASING PLAN

SYMBOL LEGEND

- EXISTING CATCH BASIN
- adj ADJUST EXISTING CATCH BASIN RIM ELEV.
- EXISTING MANHOLE
- EXISTING FIRE HYDRANT
- adj ADJUST EXISTING FIRE HYDRANT ELEVATION
- EXISTING VALVE BOX
- adj ADJUST EXISTING VALVE BOX
- adj ADJUST EXISTING MANHOLE RIM ELEVATION
- EXISTING STORM SEWER
- EXISTING SANITARY SEWER
- EXISTING SANITARY SEWER FORCE MAIN
- W EXISTING WATER MAIN
- UE EXISITNG UNDERGROUND ELECTRIC
- UT EXISITNG UNDERGROUND TELEPHONE
- FO EXISTING UNDERGROUND FIBER OPTIC
- ST EXISTING STEAM LINE
- HW EXISTING HOT WATER LINE
- DO EXISTING DIESEL OIL LINE
- SPG EXISTING SPARGING LINE
- SPG VENT EXISTING SPARGING VENT LINE
- ABANDONED STORM SEWER
- ABANDONED SANITARY SEWER
- W ABANDONED WATER MAIN
- MINOR CONTOUR LINE
- MAJOR CONTOUR LINE
- EXISTING RAIL ROAD TRACKS
- EXISTING TREE
- EXISTING ELECTRIC BOX
- ROCK OUTCROPPING
- SF SILT FENCE, REF. DETAIL 2-C1.3
- IP INLET PROTECTION, REF. DETAIL 5-C1.3
- TP TREE PROTECTION, REF. DETAIL 3-C1.3
- STABILIZED CONSTRUCTION EXIT, REF. DETAIL 1-C1.3

SYM.	D.O. NO.	ACTION	DATE	DESCRIPTION OF REVISION
			03 JAN 12	CONSTRUCTION ISSUE

The Jenkins Group
Bochenek/Jenkins/Olsen/Snoble
300 Park Boulevard, Suite 250
Itasca, Illinois 60143-3146

DEFENSE COMMISSARY AGENCY
DeCA LOGISTICS AND ENGINEERING GROUP
FORT LEE, VIRGINIA
LACKLAND AFB, TEXAS

DESIGNED BY: GPO
DRAWN BY: BAS
REVIEWED BY: EJS

NEW COMMISSARY FACILITY

SITE EROSION AND SEDIMENT CONTROL PLAN, PHASE I

NAVAL SUBMARINE BASE NEW LONDON, CT

SUBMITTED BY:
ENGINEER:

SOL. NO. | DATE: 03 JAN12
PROJECT NO.
DRAWING NUMBER | SHEET NO. 4 OF 151 | SEQUENCE NO. C1.1

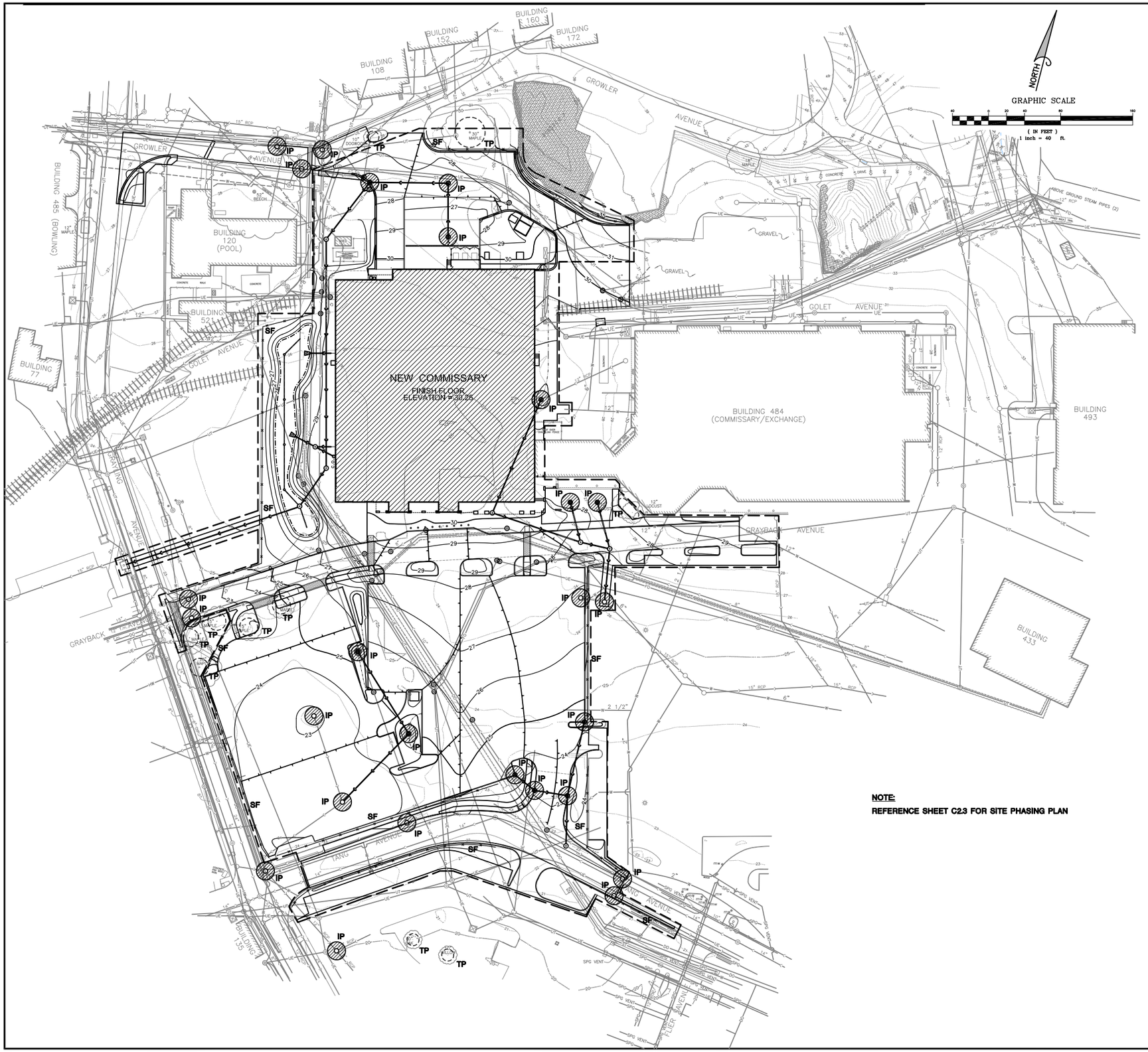

NOTE:
REFERENCE SHEET C2.3 FOR SITE PHASING PLAN

SYMBOL LEGEND

- EXISTING CATCH BASIN
- adj ADJUST EXISTING CATCH BASIN RIM ELEV.
- EXISTING MANHOLE
- EXISTING FIRE HYDRANT
- adj ADJUST EXISTING FIRE HYDRANT ELEVATION
- EXISTING VALVE BOX
- adj ADJUST EXISTING VALVE BOX
- adj ADJUST EXISTING MANHOLE RIM ELEVATION
- EXISTING STORM SEWER
- EXISTING SANITARY SEWER
- EXISTING SANITARY SEWER FORCE MAIN
- W EXISTING WATER MAIN
- UE EXISITNG UNDERGROUND ELECTRIC
- UT EXISITNG UNDERGROUND TELEPHONE
- FO EXISTING UNDERGROUND FIBER OPTIC
- ST EXISTING STEAM LINE
- HW EXISTING HOT WATER LINE
- DO EXISTING DIESEL OIL LINE
- SPG EXISTING SPARGING LINE
- SPG VENT EXISTING SPARGING VENT LINE
- ABANDONED STORM SEWER
- ABANDONED SANITARY SEWER
- ABANDONED WATER MAIN
- 27 EXISTING MINOR CONTOUR LINE
- 30 EXISTING MAJOR CONTOUR LINE
- EXISTING RAIL ROAD TRACKS
- EXISTING TREE
- EXISTING ELECTRIC BOX
- ROCK OUTCROPPING
- 27 PROPOSED MINOR CONTOUR LINE
- 30 PROPOSED MAJOR CONTOUR LINE
- SF SILT FENCE, REF. DETAIL 2-C1.3
- IP INLET PROTECTION, REF. DETAIL 5-C1.3
- TP TREE PROTECTION, REF. DETAIL 3-C1.3
- STABILIZED CONSTRUCTION EXIT, REF. DETAIL 1-C1.3

SYM.	D.O. NO.	ACTION	DATE	DESCRIPTION OF REVISION
			08 JAN 12	CONSTRUCTION ISSUE

The Jenkins Group
Bochenek/Jenkins/Olsen/Snoble
300 Park Boulevard, Suite 250
Itasca, Illinois 60143-3146

DEFENSE COMMISSARY AGENCY
DeCA LOGISTICS AND ENGINEERING GROUP
FORT LEE, VIRGINIA
LACKLAND AFB, TEXAS

DESIGNED BY: GPO
DRAWN BY: BAS
REVIEWED BY: EJS

NEW COMMISSARY FACILITY

SITE EROSION AND SEDIMENT CONTROL PLAN, PHASE II

NAVAL SUBMARINE BASE NEW LONDON, CT

SUBMITTED BY:
ENGINEER:

SOL. NO.
DATE: 08 JAN 12
PROJECT NO.
DRAWING NUMBER
SHEET NO. 5 OF 151
SEQUENCE NO. C1.2

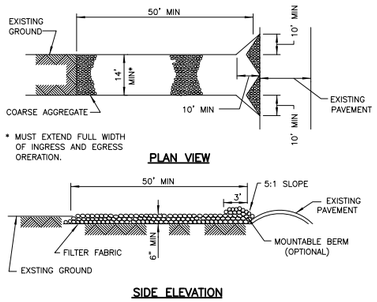

1 STABILIZED CONSTRUCTION EXIT

C1.1, C1.2 | C1.3

NOT TO SCALE

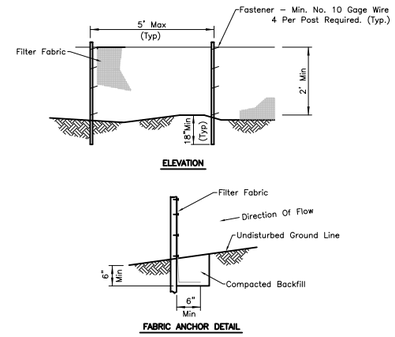

NOTES:

1. TEMPORARY SEDIMENT FENCE SHALL BE INSTALLED PRIOR TO ANY GRADING WORK IN THE AREA TO BE PROTECTED. THEY SHALL BE MAINTAINED THROUGHOUT THE CONSTRUCTION PERIOD AND REMOVED IN CONJUNCTION WITH THE FINAL GRADING.
2. FILTER FABRIC SHALL MEET THE REQUIREMENTS OF MATERIAL SPECIFICATION 592 GEOTEXTILE TABLE 1 OR 2, CLASS WITH EQUIVALENT OPENING SIZE OF AT LEAST 30 FOR NONWOVEN AND 50 FOR WOVEN.
3. FENCE POST SHALL BE EITHER STANDARD STEEL POST OR WOOD POST WITH A MINIMUM SECTIONAL AREA 3.0 SQ. IN.

2 SILT FENCE DETAIL

C1.1, C1.2 | C1.3

NOT TO SCALE

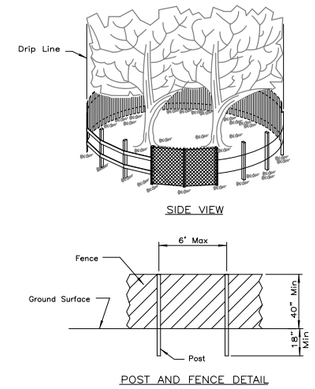

NOTES:

1. THE FENCE SHALL BE LOCATED OUTSIDE THE DRIP LINE OF THE TREE TO BE SAVED AND IN NO CASE CLOSER THAN 5 FEET TO THE TRUNK OF ANY TREE.
2. FENCE POSTS SHALL BE EITHER STANDARD STEEL POSTS OR WOOD POSTS WITH A MINIMUM CROSS SECTIONAL AREA OF 3.0 SQ.IN.
3. THE FENCE MAY BE EITHER 40" HIGH SNOW FENCE, 40" PLASTIC WEB FENCING OR ANY OTHER MATERIAL AS APPROVED BY THE ENGINEER/INSPECTOR.

3 TREE PROTECTION–FENCING

C1.1, C1.2 | C1.3

NOT TO SCALE

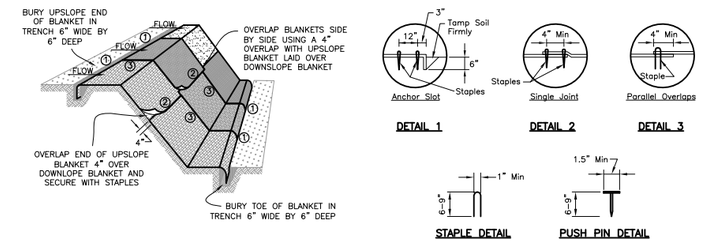

NOTES:

1. STAPLES SHALL BE PLACED IN A DIAMOND PATTERN AT 2 PER S.Y. FOR STITCHED BLANKETS. NON–STITCHED SHALL USE 4 STAPLES PER S.Y. OF MATERIAL. THIS EQUATES TO 200 STAPLES WITH STITCHED BLANKET AND 400 STAPLES WITH NON–STITCHED BLANKET PER 100 S.Y. OF MATERIAL.
2. STAPLE OR PUSH PIN LENGTHS SHALL BE SELECTED BASED ON SOIL TYPE AND CONDITIONS. (MINIMUM STAPLE LENGTH IS 6")
3. EROSION CONTROL MATERIAL SHALL BE PLACED IN CONTACT WITH THE SOIL OVER A PREPARED SEEDBED.
4. ALL ANCHOR SLOTS SHALL BE STAPLED AT APPROXIMATELY 12" INTERVALS.

4 EROSION CONTROL BLANKET

C1.1, C1.2 | C1.3

NOT TO SCALE

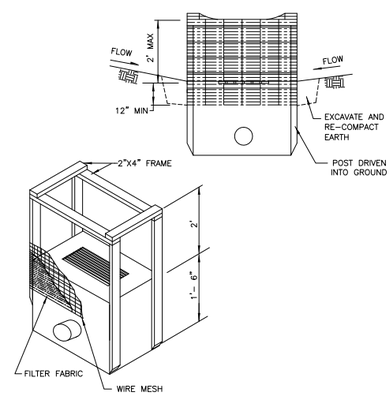

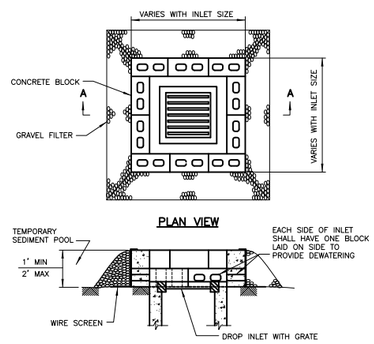

NOTES:

1. SEDIMENT SHALL BE REMOVED AND THE TRAP RESTORED TO ITS ORIGINAL DIMENSIONS WHEN THE SEDIMENT HAS ACCUMULATED TO 1/2 THE DESIGN DEPTH. REMOVED SEDIMENT SHALL BE DEPOSITED IN A SUITABLE AREA AND IN SUCH A MANNER THAT IT WILL NOT ERODE.
2. THE SEDIMENT TRAP SHALL BE REMOVED AND THE AREA STABILIZED WHEN THE CONSTRUCTED DRAINAGE AREA HAS BEEN PROPERLY STABILIZED.
3. THE WIRE SCREEN SHALL BE HARDWARE CLOTH OR COMPARABLE WIRE WESH WITH 1/2 INCH OPENINGS.
4. THE GRAVEL SHALL BE 1/2 INCH TO 3/4 INCH IN DIAMETER.

BLOCK AND GRAVEL

Species[4]	Seeding Rates (pounds)		Optimum Seed Depth[2] (inches)	Optimum Seeding Dates[1]																Plant Characteristics
				3/15		4/15		5/15		6/15		7/15		8/15		9/15		10/15		
	/Acre	/1000 sq. ft.		3/1		4/1		5/1		6/1		7/1		8/1		9/1		10/1		
Annual ryegrass Lolium multiflorum	40	1.0	0.5																	May be added in mixes. Will mow out of most stands
Annual ryegrass Lolium multiflorum	40	1.0	0.5																	Use for winter cover. Tolerates cold and low moisture.
Winter Rye Secale cereale	120	3.0	1.0																	Quick germination with moderate growth. Dies back in June with no regrowth.
Oats Avena sativa	86	2.0	1.0																	In northern CT, will winter kill with the first killing frost and may throughout the state in severe winters.
Winter Wheat Triticum aestivum	120	3.0	1.0																	Quick germination with moderate growth. Dies back in June with no regrowth.
Millet Echinochloa crusgalli	20	0.5	1.0																	Warm season small grain. Dies with frost in September.
Sudangrass Sorghum sudanense	30	0.7	1.0																	Tolerates warm temperatures and droughty conditions.
Buckwheat Fagopyrum esculentum	15	0.4	1.0																	Hardy plant that will reseed itself and is good as a green manure crop.
Weeping lovegrass Eragostis curbula	5	0.2	0.3																	Warm–season perennial. May bunch. Tolerates hot, dry slopes, acid infertile soils. Excellent nurse crop. Usually winter kills.
DOT All Purpose Mix[3]	150	3.4	0.5																	Suitable for all conditions.

[1] May be planted throughout summer if soil moisture is adequate or can be irrigated. Fall seeding may be extended 15 days in the coastal towns.
[2] Seed at twice the indicated depth for sandy soils.
[3] Refer to Permanent Seeding Figure PS–3 in "2002 Connecticut Guidelines for Soil Erosion and Sediment Control" for seeding mixture requirements.
[4] Listed species may be used in combinations to obtain a broader time spectrum. If used in combinations, reduce each species planting rate by 20% of that listed.

FIGURE TS–2, FROM "2002 CONNECTICUT GUIDELINES FOR SOIL EROSION AND SEDIMENT CONTROL," SECTION 5–3–2

TEMPORARY SEEDING

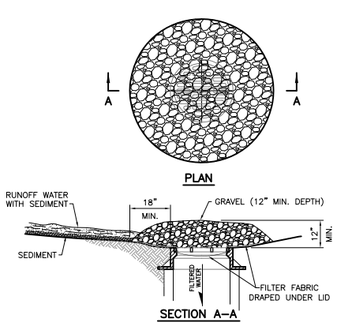

GRAVEL AND WIRE MESH

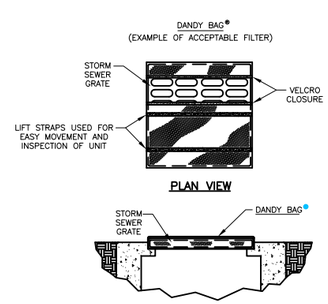

FILTER FABRIC INSERT

5 DROP INLET PROTECTION

C1.1, C1.2 | C1.3

NOT TO SCALE

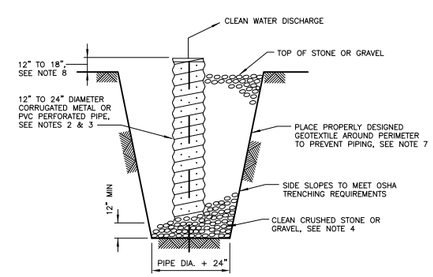

NOTES:

1. OVERALL SUMP PIT DIMENSIONS SHALL BE COMPATIBLE WITH ANTICIPATED SEEPAGE RATES AND PUMP SIZE TO BE USED.
2. THE STANDPIPE DIAMETER AND NUMBER OF PERFORATIONS SHALL BE COMPATIBLE WITH THE PUMP SIZE BEING USED.
3. PERFORATIONS IN THE STANDPIPE SHALL BE EITHER CIRCULAR OR SLOTS. PERFORATION SIZE SHALL NOT EXCEED 1/2" IN DIAMETER.
4. CRUSHED STONE OR GRAVEL SHALL BE NO SMALLER THAN CT DOT #67 SIZE NOR LARGER THAN CT DOT #3 SIZE. CRUSHED STONE SHALL EXTEND A MINIMUM OF 12" BELOW THE BOTTOM OF THE STANDPIPE.
5. IF DISCHARGE WILL BE PUMPED DIRECTLY TO A STORM DRAINAGE SYSTEM, THE STANDPIPE WILL BE WRAPPED WITH FILTER FABRIC BEFORE INSTALLATION.
6. IF DESIRED, 1/4"–1/2" HARDWARE CLOTH MAY BE PLACED AROUND THE STANDPIPE PRIOR TO ATTACHING THE FILTER FABRIC. THIS WILL INCREASE THE RATE OF WATER SEEPAGE INTO THE PIPE.
7. IF EXCESSIVE MOVEMENT OF FINE SOIL PARTICLES FROM THE SURROUNDING EXISTING SOILS IS ANTICIPATED, A PROPERLY DESIGN GEOTEXTILE SHALL BE PLACED BETWEEN THE EXISTING SOILS AND THE CRUSHED STONE OR GRAVEL BACKFILL.
8. THE STANDPIPE SHALL EXTEND 12" TO 18" ABOVE THE SURROUNDING GROUND.

6 SUMP PIT

– | C1.3

NOT TO SCALE

SYM.	D.O. NO.	ACTION	DATE	DESCRIPTION OF REVISION
			03 JAN 12	CONSTRUCTION ISSUE

The Jenkins Group
Bochenek/Jenkins/Olsen/Snoble
300 Park Boulevard, Suite 250
Itasca, Illinois 60143-3146

DEFENSE COMMISSARY AGENCY
DeCA LOGISTICS AND ENGINEERING GROUP
FORT LEE, VIRGINIA
LACKLAND AFB, TEXAS

DESIGNED BY: GPO
DRAWN BY: BAS
REVIEWED BY: EJS

NEW COMMISSARY FACILITY

SITE EROSION AND SEDIMENT CONTROL DETAILS

NAVAL SUBMARINE BASE NEW LONDON, CT

SUBMITTED BY:
ENGINEER:
SOL. NO.
DATE: 03 JAN 12
PROJECT NO.
DRAWING NUMBER
SHEET NO. 6 OF 151
SEQUENCE NO. C13

APPENDIX C: COPY OF CONSTRUCTION GENERAL PERMIT

NPDES General Permit for Stormwater Discharges From Construction Activities

Table of Contents

PART 1: COVERAGE UNDER THIS PERMIT 2
1.1 Introduction 2
1.2 Permit Area 2
1.3 Eligibility 2
1.4 Waivers for Certain Small Construction Activities 6
PART 2: AUTHORIZATION FOR DISCHARGES OF STORMWATER FROM CONSTRUCTION ACTIVITY 6
2.1 How to Obtain Authorization 6
2.2 How to Submit Your NOI 7
2.3 Authorization to Discharge Date 7
2.4 Submission Deadlines 7
2.5 Continuation of the Expired General Permit 8
2.6 Requiring Coverage Under an Individual Permit or an Alternative General Permit 8
PART 3: EFFLUENT LIMITS 9
3.1 Effluent Limits to Reduce Pollutants in Stormwater Discharges 9
3.2 Effluent Limits to Reduce Pollutants in Non-Stormwater Discharges 12
3.3 Effluent Limits Related to Endangered Species 12
3.4 Attainment of Water Quality Standards 12
3.5 Consistency with Total Maximum Daily Loads 12
3.6 Maintenance of Control Measures 13
3.7 Training of Employees 13
3.8 Applicable State, Tribal, or Local Programs 13
PART 4: INSPECTIONS 13
PART 5: STORMWATER POLLUTION PREVETNION PLANS (SWPPPs) 15
5.1 Stormwater Pollution Prevention Plan Framework 15
5.2 SWPPP Contents: Site and Activity Description 16
5.3 Description of Control Measures to Reduce Pollutant Discharges 16
5.4 Non-Stormwater Discharges 17
5.5 Documentation of Permit Eligibility Related to Endangered Species 17
5.6 Documentation of Permit Eligibility Related to Total Maximum Daily Loads. 18
5.7 Copy of Permit Requirements 18
5.8 Applicable State, Tribal, or Local Programs 18
5.9 Inspections 18
5.10 Maintaining an Updated Plan 18
5.11 Signature, Plan Review and Making Plans Available 19
5.12 Requirements for Different Types of Operators 20
PART 6: TERMINATION OF COVERAGE 21
6.1 Submitting a Notice of Termination 21
6.2 When to Submit a Notice of Termination 21
PART 7: RETENTION OF RECORDS 21

PART 8: REOPENER CLAUSE 21
8.1 Procedures for Modification or Revocation 21
8.2 Water Quality Protection 22
8.3 Timing of Permit Modification 22
PART 9: STANDARD PERMIT CONDITIONS 22
PART 10: PERMIT CONDITIONS APPLICABLE TO SPECIFIC STATES, INDIAN COUNTRY, OR TERRITORIES 22
Appendix A - Definitions and Acronyms A-1
Appendix B - Permit Areas Eligible for Coverage B-1
Appendix C - Endangered Species Act Review Procedures C-1
Appendix D - Small Construction Waivers and Instructions D-1
Appendix E - Notice of Intent Form and Instructions E-1
Appendix F - Notice of Termination Form and Instructions F-1
Appendix G - Standard Permit Conditions G-1

National Pollutant Discharge Elimination System
General Permit for Discharges from
Large and Small Construction Activities

In compliance with the provisions of the Clean Water Act, 33 U.S.C. §1251 et. seq., (hereafter CWA or the Act), as amended by the Water Quality Act of 1987, P.L. 100-4, operators of large and small construction activities that are described in Part 1.3 of this National Pollutant Discharge Elimination System (NPDES) general permit, except for those activities excluded from authorization of discharge in Part 1.3.C of this permit are authorized to discharge pollutants to waters of the United States in accordance with the conditions and requirements set forth herein. Permit coverage is required from the "commencement of construction activities" until "final stabilization" as defined in Appendix A.

This permit shall become effective on June 30, 2008.

This permit and the authorization to discharge shall expire at midnight, June 30, 2010.

Signed:

Stephen S. Perkins, Director, Office of Ecosystem Protection
EPA Region 1

Jon M. Capacasa, Director, Water Protection Division
EPA Region 3

Miguel I. Flores, Director, Water Quality Protection Division
EPA Region 6

William A. Spratlin, Director, Water, Wetlands and Pesticides Division
EPA Region 7

Stephen S. Tuber, Assistant Regional Administrator, Office of Partnerships & Regulatory Assistance
EPA Region 8

Alexis Strauss, Director, Water Division
EPA Region 9

Michael Gearheard, Director, Office of Water and Watersheds
EPA Region 10

The signatures are for the permit conditions in Parts 1 through 10 and Appendices A through G, and for any additional conditions which apply to facilities located in the corresponding state, Indian country, or other area.

PART 1: COVERAGE UNDER THIS PERMIT

1.1 Introduction

This Construction General Permit (CGP) authorizes stormwater discharges from large and small construction activities that result in a total land disturbance of equal to or greater than one acre, where those discharges enter surface waters of the United States or a municipal separate storm sewer system (MS4) leading to surface waters of the United States subject to the conditions set forth in this permit. This permit also authorizes stormwater discharges from any other construction activity designated by EPA where EPA makes that designation based on the potential for contribution to an excursion of a water quality standard or for significant contribution of pollutants to waters of the United States. This permit replaces the permit issued in 2003 (68 FR 39087, July 1, 2003), including the modification made to that permit in 2004 (69 FR 76743, December 22, 2004).

This permit is presented in a reader-friendly, plain language format. This permit uses the terms "you" and "your" to identify the person(s) who owns or operates a "facility" or "activity" as defined in Appendix A and who must comply with the conditions of this permit. This format should allow you, the permittee and operator of a large or small construction activity, to easily locate and understand applicable requirements.

The goal of this permit is to minimize the discharge of stormwater pollutants from construction activity.

1.2 Permit Area

If your large or small construction activity is located within the areas listed in Appendix B, you may be eligible to obtain coverage under this permit. Permit coverage is actually provided by legally separate and distinctly numbered permits covering each of the areas listed in Appendix B.

1.3 Eligibility

Permit eligibility is limited to discharges from "large" and "small" construction activity, and to "new projects" and "unpermitted ongoing projects," as defined in Appendix A or as otherwise designated by EPA. This general permit contains eligibility restrictions, as well as permit conditions and requirements. You may have to take certain actions to be eligible for coverage under this permit. In such cases, you must continue to satisfy those eligibility provisions to maintain permit authorization. If you do not meet the requirements that are a pre-condition to eligibility, then resulting discharges constitute unpermitted discharges. By contrast, if you eligible for coverage under this permit and do not comply with the requirements of the general permit, you may be in violation of the general permit for your otherwise eligible discharges.

A. Allowable Stormwater Discharges

Subject to compliance with the terms and conditions of this permit, you are authorized to discharge pollutants in:

1. Stormwater discharges associated with large and small construction activity from "new projects" and "unpermitted ongoing projects" as defined in Appendix A;
2. Stormwater discharges designated by EPA as needing a stormwater permit under 40 CFR §122.26(a)(1)(v) or §122.26(b)(15)(ii);
3. Discharges from support activities (e.g., concrete or asphalt batch plants, equipment staging yards, material storage areas, excavated material disposal areas, borrow areas) provided:
   a. The support activity is directly related to the construction site required to have NPDES permit coverage for discharges of stormwater associated with construction activity;
   b. The support activity is not a commercial operation serving multiple unrelated construction projects by different operators, and does not operate beyond the completion of the construction activity at the last construction project it supports; and
   c. Pollutant discharges from support activity areas are minimized in compliance with Part 3.1.G; and
4. Discharges composed of allowable discharges listed in 1.3.A and 1.3.B commingled with a discharge authorized by a different NPDES permit and/or a discharge that does not require NPDES permit authorization.

B. Allowable Non-Stormwater Discharges

You are authorized for the following non-stormwater discharges, provided the non-stormwater component of the discharge is in compliance with Part 5.4 (Non-Stormwater Discharges):

1. Discharges from fire-fighting activities;
2. Fire hydrant flushings;
3. Waters used to wash vehicles where detergents are not used;
4. Water used to control dust in accordance with Part 3.1.B;
5. Potable water including uncontaminated water line flushings;
6. Routine external building wash down that does not use detergents;
7. Pavement wash waters where spills or leaks of toxic or hazardous materials have not occurred (unless all spilled material has been removed) and where detergents are not used;
8. Uncontaminated air conditioning or compressor condensate;
9. Uncontaminated ground water or spring water;
10. Foundation or footing drains where flows are not contaminated with process materials such as solvents;
11. Uncontaminated excavation dewatering;
12. Landscape irrigation.

C. Limitations on Coverage

1. This permit does not authorize post-construction discharges that originate from the site after construction activities have been completed and the site has achieved final stabilization, including any temporary support activity. Post-construction

stormwater discharges from industrial sites may need to be covered by a separate NPDES permit.

2. This permit does not authorize discharges mixed with non-stormwater. This exclusion does not apply to discharges identified in Part 1.3.B, provided the discharges are in compliance with Part 5.4 (Non-Stormwater Discharges).
3. This permit does not authorize stormwater discharges associated with construction activity that have been covered under an individual permit or required to obtain coverage under an alternative general permit in accordance with Part 2.6.
4. This permit does not authorize discharges that EPA, prior to authorization under this permit, determines will cause, have the reasonable potential to cause, or contribute to an excursion above any applicable water quality standard. Where such a determination is made prior to authorization, EPA may notify you that an individual permit application is necessary in accordance with Part 2.6. However, EPA may authorize your coverage under this permit after you have included appropriate controls and implementation procedures in your permit designed to bring your discharge into compliance with water quality standards.
5. *Discharging into Receiving Waters With an Approved or Established Total Maximum Daily Load Analysis*
   a. You are not eligible for coverage under this permit for discharges of pollutants of concern to waters for which there is a total maximum daily load (TMDL) established or approved by EPA unless implement measures or controls that are consistent with the assumptions and requirements of such TMDL. To be eligible for coverage under this general permit, you must implement conditions applicable to your discharges necessary for consistency with the assumptions and requirements of such TMDL. If a specific wasteload allocation has been established that would apply to your discharge, you must implement necessary steps to meet that allocation.
   b. In a situation where an EPA-approved or established TMDL has specified a general wasteload allocation applicable to construction stormwater discharges, but no specific requirements for construction sites have been identified in the TMDL**,** you should consult with the State or Federal TMDL authority to confirm that meeting the effluent limits in Part 3 of this permit will be consistent with the approved TMDL. Where an EPA-approved or established TMDL has not specified a wasteload allocation applicable to construction stormwater discharges, but has not specifically excluded these discharges, compliance with the effluent limits in Part 3 of this permit will generally be assumed to be consistent with the approved TMDL. If the EPA-approved or established TMDL specifically precludes such discharges, the operator is not eligible for coverage under the CGP.
6. *Endangered and Threatened Species and Critical Habitat Protection*
   a. Coverage under this permit is available only if your stormwater discharges, allowable non-stormwater discharges, and stormwater discharge-related activities, as defined in Appendix A, are not likely to jeopardize the continued existence of any species that are federally-listed as endangered or threatened ("listed") under the Endangered Species Act (ESA) or result in the adverse

modification or destruction of habitat that is federally-designated as critical under the ESA ("critical habitat").

b. You are not eligible to discharge if the stormwater discharges, allowable non-stormwater discharges, or stormwater discharge-related activities would cause a prohibited "take" of federally-listed endangered or threatened species (as defined under section 3 of the ESA and 50 CFR 17.3), unless such takes are authorized under sections 7 or 10 of the ESA.

c. Determining Eligibility: You must use the process in Appendix C (ESA Review Procedures) to determine eligibility *PRIOR* to submittal of the Notice of Intent (NOI). You must meet one or more of the following six criteria (A-F) for the entire term of coverage under the permit:

Criterion A. No federally-listed threatened or endangered species or their designated critical habitat are in the project area as defined in Appendix C; or

Criterion B. Formal consultation with the Fish and Wildlife Service and/or the National Marine Fisheries Service under section 7 of the ESA has been concluded and that consultation:

i. Addressed the effects of the project's stormwater discharges, allowable non-stormwater discharges, and stormwater discharge-related activities on federally-listed threatened or endangered species and federally-designated critical habitat, and

ii. The consultation resulted in either:

a. Biological opinion finding no jeopardy to federally-listed species or destruction/adverse modification of federally-designated critical habitat, or

b. Written concurrence from the Service(s) with a finding that the stormwater discharges, allowable non-stormwater discharges, and stormwater discharge-related activities are not likely to adversely affect federally-listed species or federally-designated critical habitat; or

Criterion C. Informal consultation with the Fish and Wildlife Service and/or the National Marine Fisheries Service under section 7 of the ESA has been concluded and that consultation:

i. Addressed the effects of the project's stormwater discharges, allowable non-stormwater discharges, and stormwater discharge-related activities on federally-listed threatened or endangered species and federally-designated critical habitat, and

ii. The consultation resulted in either:

a. Biological opinion finding no jeopardy to federally-listed species or destruction/adverse modification of federally-designated critical habitat, or

b. Written concurrence from the Service(s) with a finding that the stormwater discharges, allowable non-stormwater discharges, and stormwater discharge-related activities are

not likely to adversely affect federally-listed species or federally-designated critical habitat; or

Criterion D. The construction activities are authorized through the issuance of a permit under section 10 of the ESA, and that authorization addresses the effects of the stormwater discharges, allowable non-stormwater discharges, and stormwater discharge-related activities on federally-listed species and federally-designated critical habitat; or

Criterion E. Stormwater discharges, allowable non-stormwater discharges, and stormwater discharge-related activities are not likely to adversely affect any federally-listed threatened or endangered species or result in the destruction or adverse modification of federally-designated critical habitat; or

Criterion F. The project's stormwater discharges, allowable non-stormwater discharges, and stormwater discharge-related activities were already addressed in another operator's valid certification of eligibility under Criteria A-E which included your construction activities and there is no reason to believe that federally-listed species or federally-designated critical habitat not considered in the prior certification may be present or located in the project area. By certifying eligibility under this criterion, you agree to comply with any measures or controls upon which the other operator's certification was based.

You must comply with any applicable terms, conditions, or other requirements developed in the process of meeting the eligibility requirements of the criteria in this section to remain eligible for coverage under this permit.

7. *Historic Properties*
   [Reserved]
   You are reminded that you must comply with applicable state, tribal and local laws concerning the protection of historic properties and places.

1.4 Waivers for Certain Small Construction Activities

Three scenarios exist under which small construction activities (see definition in Appendix A) may be waived from the NPDES permitting requirements detailed in this general permit. These exemptions are predicated on certain criteria being met and proper notification procedures being followed. Details of the waiver options and procedures for requesting a waiver are provided in Appendix D.

PART 2: AUTHORIZATION FOR DISCHARGES OF STORMWATER FROM CONSTRUCTION ACTIVITY

2.1 How to Obtain Authorization

To obtain coverage under this general permit, you, the operator, must prepare and submit a complete and accurate Notice of Intent (NOI), as described in this Part. Discharges are not authorized if your NOI is incomplete or inaccurate or if you were never eligible for permit coverage.

2.2 How to Submit Your NOI

You must either use EPA's electronic NOI system (accessible at www.epa.gov/npdes/eNOI or use a paper form (included in Appendix E) and then submit that paper form to:

For Regular U.S. Mail Delivery:
EPA Stormwater Notice Processing Center
Mail Code 4203M
U.S. EPA
1200 Pennsylvania Avenue, NW
Washington, DC 20460

For Overnight/Express Mail Delivery:
EPA Stormwater Notice Processing Center
Room 7420
U.S. EPA
1201 Constitution Avenue, NW
Washington, DC 20004

2.3 Authorization to Discharge Date

You are authorized to discharge stormwater from construction activities under the terms and conditions of this permit seven (7) calendar days after acknowledgment of receipt of your complete NOI is posted on EPA's NPDES website http://www.epa.gov/npdes/stormwater/cgp. The exception to this 7-day timeframe is if EPA delays your authorization based on eligibility considerations of Part 1.3 (e.g., ESA concerns). Under this circumstance, you are not authorized for coverage under this permit until you receive notice from EPA of your eligibility.

2.4 Submission Deadlines

A. *New Projects:* To obtain coverage under this permit, you must submit a complete and accurate NOI and be authorized consistent with Part 2.3 prior to your commencement of construction activities.

B. *Permitted Ongoing Projects:* Permitted ongoing projects are not eligible for coverage under this permit. If you previously received authorization to discharge for your project under the 2003 CGP, your authorization will be automatically continued under that permit until the expiration of this permit and the issuance of a new CGP, or the termination of coverage by you under the 2003 CGP, whichever is earlier. Note: If you are an operator of a permitted ongoing project and you transfer ownership of the project, or a portion thereof, to a different operator, that operator will be required to submit a complete and accurate NOI for a new project in accordance with Part 2.2.

C. *Unpermitted Ongoing Projects:* If you previously did not receive authorization to discharge for your project under the 2003 CGP and you wish to obtain coverage under this permit, you must submit an NOI within 90 days of the issuance date of this permit.

D. *Late Notifications:* Operators are not prohibited from submitting NOIs after initiating clearing, grading, excavation activities, or other construction activities. When a late NOI is submitted, authorization for discharges occurs consistent with Part 2.3. The Agency reserves the right to take enforcement action for any unpermitted discharges that occur between the commencement of construction and discharge authorization.

2.5 Continuation of the Expired General Permit

If this permit is not reissued or replaced prior to the expiration date, it will be administratively continued in accordance with the Administrative Procedure Act and remain in force and effect. If you were granted permit coverage prior to the expiration date, you will automatically remain covered by the continued permit until the earliest of:

A. Reissuance or replacement of this permit, at which time you must comply with the conditions of the new permit to maintain authorization to discharge; or

B. Your submittal of a Notice of Termination; or

C. Issuance of an individual permit for the project's discharges; or

D. A formal permit decision by EPA to not reissue this general permit, at which time you must seek coverage under an alternative general permit or an individual permit.

2.6 Requiring Coverage Under an Individual Permit or an Alternative General Permit

A. EPA may require you to apply for and/or obtain either an individual NPDES permit or coverage under an alternative NPDES general permit. Any interested person may petition EPA to take action under this paragraph. If EPA requires you to apply for an individual NPDES permit, EPA will notify you in writing that a permit application is required. This notification will include a brief statement of the reasons for this decision and an application form. In addition, if you are an existing permittee covered under this permit, the notice will set a deadline to file the application, and will include a statement that on the effective date of issuance or denial of the individual NPDES permit or the coverage or denial of coverage under the alternative general permit as it applies to you, coverage under this general permit will automatically terminate. Applications must be submitted to EPA at the applicable EPA Regional offices listed in Appendix B of this permit. EPA may grant additional time to submit the application upon your request. If you are covered under this permit and you fail to submit in a timely manner an individual NPDES permit application as required by EPA, then the applicability of this permit to you is automatically terminated at the end of the day specified by EPA as the deadline for application submittal.

B. You may request to be excluded from coverage under this general permit by applying for an individual permit. In such a case, you must submit an individual application in accordance with the requirements of 40 CFR §122.26(c)(1)(ii), with reasons supporting the request, to EPA at the applicable EPA Regional office listed in

Appendix B of this permit. The request may be granted by issuance of an individual permit or coverage under an alternative general permit if your reasons are adequate to support the request.

C. When an individual NPDES permit is issued to you (as an entity that is otherwise subject to this permit), or you are authorized to discharge under an alternative NPDES general permit, the applicability of this permit to you is automatically terminated on the effective date of the individual permit or the date of authorization of coverage under the alternative general permit, whichever the case may be. If you (as an entity that is otherwise subject to this permit) are denied an individual NPDES permit or an alternative NPDES general permit, the applicability of this permit to you is automatically terminated on the date of such denial, unless otherwise specified by EPA.

PART 3: EFFLUENT LIMITS

This section includes technology-based and water quality-based effluent limits that apply to all dischargers, unless otherwise specified. You must select, install, and maintain control measures (e.g., Best Management Practices ("BMPs"), controls, practices, etc.) for each major construction activity, identified in your Part 5 project description, to meet these effluent limits. All control measures must be properly selected, installed, and maintained in accordance with any relevant manufacturer specifications and good engineering practices. You must implement the control measures from commencement of construction activity until final stabilization is complete.

The term "minimize" as used in Part 3 means reduce and/or eliminate to the extent achievable using control measures that are technologically available and economically practicable and achievable in light of best industry practice.

3.1 Effluent Limits to Reduce Pollutants in Stormwater Discharges

You must implement control measures to minimize pollutants in stormwater discharges.

A. ***Sediment Controls:*** You must implement the following, where applicable:

1. Sediment Basins: For common drainage locations that serve an area with 10 or more acres disturbed at one time, a temporary (or permanent) sediment basin that provides storage for a calculated volume of runoff from the drainage area from a 2-year, 24-hour storm, or equivalent control measures, must be provided where attainable until final stabilization of the site. Where no such calculation has been performed, a temporary (or permanent) sediment basin providing 3,600 cubic feet of storage per acre drained, or equivalent control measures, must be provided where attainable until final stabilization of the site. When computing the number of acres draining into a common location, it is not necessary to include flows from offsite areas and flows from on-site areas that are either undisturbed or have undergone final stabilization where such flows are diverted around both the disturbed area and the sediment basin. In determining whether installing a sediment basin is attainable, the operator may consider factors such as site soils,

slope, available area on-site, etc. In any event, the operator must consider public safety, especially as it relates to children, as a design factor for the sediment basin, and alternative sediment controls must be used where site limitations would preclude a safe design.

2. For drainage locations which serve 10 or more disturbed acres at one time and where a temporary sediment basin or equivalent controls is not attainable, smaller sediment basins and/or sediment traps should be used. At a minimum, silt fences, vegetative buffer strips, or equivalent sediment controls are required for all down slope boundaries (and for those side slope boundaries deemed appropriate as dictated by individual site conditions).

3. For drainage locations serving less than 10 acres, smaller sediment basins and/or sediment traps should be used. At a minimum, silt fences, vegetative buffer strips, or equivalent sediment controls are required for all down slope boundaries (and for those side slope boundaries deemed appropriate as dictated by individual site conditions) of the construction area unless a sediment basin providing storage for a calculated volume of runoff from a 2-year, 24-hour storm or 3,600 cubic feet of storage per acre drained is provided.

B. ***Off-Site Sediment Tracking and Dust Control:*** You must minimize off-site vehicle tracking of sediments onto paved surfaces and the generation of dust. If sediment escapes the construction site, off-site accumulations of sediment must be removed at a frequency sufficient to minimize off-site impacts.

C. ***Runoff Management:*** You must divert flows from exposed soils, retain/detain flows or otherwise minimize runoff and the discharge of pollutants from exposed areas of the site. You must avoid placement of structural practices in floodplains to the degree technologically and economically practicable and achievable.

D. ***Erosive Velocity Control:*** You must place velocity dissipation devices at discharge locations and along the length of any outfall channel to provide a non-erosive flow velocity from the structure to a water course so that the natural physical and biological characteristics and functions are maintained and protected (e.g., no significant changes in the hydrological regime of the receiving water).

E. ***Post-Construction Stormwater Management:*** You must comply with any applicable federal, local, state, or tribal requirements regarding the design and installation of post-construction stormwater controls. Structural measures should be placed on upland soils to the degree practicable and achievable.

F. ***Construction and Waste Materials:*** You must:
   1. Prevent the discharge of solid materials, including building materials, to waters of the United States, except as authorized by a permit issued under section 404 of the CWA;

2. Minimize exposure of construction and waste materials to stormwater, and the occurrence of spills, through the use of storage practices, prevention and response practices, and other controls;
3. Prevent litter, construction debris, and construction chemicals (e.g., diesel fuel, hydraulic fluids, and other petroleum products) that could be exposed to stormwater from becoming a pollutant source in stormwater discharges.

G. ***Non-Construction Wastes:*** You must minimize pollutant discharges from areas other than construction (including stormwater discharges from dedicated asphalt plants and dedicated concrete plants).

H. ***Erosion Control and Stabilization:***
1. ***General Requirements:*** You must stabilize the site. You must ensure that existing vegetation is preserved where possible and that disturbed portions of the site are stabilized. You should avoid using impervious surfaces for stabilization.
2. ***Initiation Deadlines:*** You must initiate stabilization measures, except as provided below, as soon as practicable in portions of the site where construction activities have temporarily or permanently ceased, but in no case more than 14 days after the construction activity in that portion of the site has temporarily or permanently ceased.
   i. Where stabilization by the 14th day is precluded by snow cover or frozen ground conditions, stabilization measures must be initiated as soon as practicable.
   ii. Where construction activity on a portion of the site is temporarily ceased, and earth disturbing activities will be resumed within 14 days, temporary stabilization measures do not have to be initiated on that portion of the site.
   iii. In arid, semiarid, and drought-stricken areas where initiating perennial vegetative stabilization measures is not possible within 14 days after construction activity has temporarily or permanently ceased, final vegetative stabilization measures must be initiated as soon as practicable.

I. ***Spills / Releases in Excess of Reportable Quantities:*** You are not authorized to discharge hazardous substances or oil resulting from an on-site spill. This permit does not relieve you of the federal reporting requirements of 40 CFR Part 110, 40 CFR Part 117 and 40 CFR Part 302 relating to spills or other releases of oils or hazardous substances.

Where a release containing a hazardous substance or oil in an amount equal to or in excess of a reportable quantity established under either 40 CFR Part 110, 40 CFR Part 117 or 40 CFR Part 302, occurs during a 24-hour period:

- you must provide notice to the National Response Center (NRC) (800–424–8802; in the Washington, DC, metropolitan area call 202–267–2675) in accordance with the requirements of 40 CFR Part 110, 40 CFR Part 117 and 40 CFR Part 302 as soon as site staff have knowledge of the discharge; and

- you must, within 7 calendar days of knowledge of the release, provide a description of the release, the circumstances leading to the release, and the date of the release. You must also implement measures to prevent the reoccurrence of such releases and to respond to such releases.

3.2 Effluent Limits to Reduce Pollutants in Non-Stormwater Discharges

You must minimize any non-stormwater discharges authorized by this permit.

3.3 Effluent Limits Related to Endangered Species

You must protect federally-listed endangered or threatened species, or federally-designated critical habitat to maintain eligibility under Part 1.3.C.6.

3.4 Attainment of Water Quality Standards

A. You must select, install, implement and maintain control measures at your construction site that minimize pollutants in the discharge as necessary to meet applicable water quality standards. In general, except in situations explained in Part 3.4.B below, your stormwater controls developed, implemented, and updated consistent with the other provisions of Part 3 are considered as stringent as necessary to ensure that your discharges do not cause or contribute to an excursion above any applicable water quality standard.

B. At any time after authorization, EPA may determine that your stormwater discharges may cause, have reasonable potential to cause, or contribute to an excursion above any applicable water quality standard. If such a determination is made, EPA will require you to:

   i. Modify your stormwater controls in accordance with Part 3.6 to address adequately the identified water quality concerns;
   ii. Submit valid and verifiable data and information that are representative of ambient conditions and indicate that the receiving water is attaining water quality standards; or
   iii. Cease discharges of pollutants from construction activity and submit an individual permit application according to Part 2.6.

All written responses required under this part must include a signed certification consistent with Appendix G, Section 11.

3.5 Consistency with Total Maximum Daily Loads

If you are discharging into a water with an EPA established or approved TMDL, you must implement measures to ensure that your discharge of pollutants from the site is consistent with the assumptions and requirements of the EPA-established or approved TMDL, including any specific wasteload allocation that has been established that would apply to your discharge. See Part 1.3.C.5 for further information on determining permit eligibility related to TMDLs.

3.6 Maintenance of Control Measures

A. You must maintain all control measures and other protective measures in effective operating condition. If site inspections required by Part 4 identify BMPs that are not operating effectively, you must perform maintenance as soon as possible and before the next storm event whenever practicable to maintain the continued effectiveness of stormwater controls.

B. If existing BMPs need to be modified or if additional BMPs are necessary for any reason, you must complete implementation before the next storm event whenever practicable. If implementation before the next storm event is impracticable, you must implement alternative BMPs as soon as possible.

C. You must remove sediment from sediment traps or sedimentation ponds when design capacity has been reduced by 50 percent.

D. You must remove trapped sediment from a silt fence before the deposit reaches 50 percent of the above-ground fence height (or before it reaches a lower height based on manufacturer's specifications).

3.7 Training of Employees

You must train employees and subcontractors as necessary to make them aware of the applicable control measures implemented at the site so that they follow applicable procedures.

3.8 Applicable State, Tribal, or Local Programs

You must ensure that the stormwater controls implemented at your site are consistent with all applicable federal, state, tribal, or local requirements for soil and erosion control and stormwater management.

PART 4: INSPECTIONS

A. ***Inspection Frequency:*** You must conduct inspections in accordance with one of the two schedules listed below. You must specify in your SWPPP which schedule you will be following.
   1. At least once every 7 calendar days, OR
   2. At least once every 14 calendar days and within 24 hours of the end of a storm event of 0.5 inches or greater.

B. ***Case-by-Case Reductions in Inspection Frequency:*** You may reduce your inspection frequency to at least once every month if:
   1. The entire site is temporarily stabilized,
   2. Runoff is unlikely due to winter conditions (e.g., site is covered with snow, ice, or the ground is frozen), or
   3. Construction is occurring during seasonal arid periods in arid areas and semi-arid areas.

C. ***Inspection Waiver for Frozen Conditions:*** A waiver of the inspection requirements is available until one month before thawing conditions are expected to result in a discharge if all of the following requirements are met:
   1. The project is located in an area where frozen conditions are anticipated to continue for extended periods of time (i.e., more than one month);
   2. Land disturbance activities have been suspended; and
   3. The beginning and ending dates of the waiver period are documented in the SWPPP.

D. ***Qualified Personnel:*** Inspections must be conducted by qualified personnel (provided by the operator or cooperatively by multiple operators). "Qualified personnel" means a person knowledgeable in the principles and practice of erosion and sediment controls who possesses the skills to assess conditions at the construction site that could impact stormwater quality and to assess the effectiveness of any sediment and erosion control measures selected to control the quality of stormwater discharges from the construction activity.

E. ***Scope of Inspections:*** Inspections must include all areas of the site disturbed by construction activity and areas used for storage of materials that are exposed to precipitation. Inspectors must look for evidence of, or the potential for, pollutants entering the stormwater conveyance system. Sedimentation and erosion control measures must be observed to ensure proper operation. Discharge locations must be inspected to ascertain whether erosion control measures are effective in preventing significant impacts to waters of the United States, where accessible. Where discharge locations are inaccessible, nearby downstream locations must be inspected to the extent that such inspections are practicable. Locations where vehicles enter or exit the site must be inspected for evidence of off-site sediment tracking.

F. ***Reductions in Scope of Inspections for Stabilized Areas:*** Once a definable area has been finally stabilized, no further inspection requirements apply to that portion of the site (e.g., earth-disturbing activities around one of three buildings in a complex are done and the area is finally stabilized, one mile of a roadway or pipeline project is done and finally stabilized, etc).

G. ***Utility Line Inspections:*** Utility line installation, pipeline construction, and other examples of long, narrow, linear construction activities may limit the access of inspection personnel to the areas described in Part 4.E above. Inspection of these areas could require that vehicles compromise temporarily or even permanently stabilized areas, cause additional disturbance of soils, and increase the potential for erosion. In these circumstances, controls must be inspected on the same frequencies as other construction projects, but representative inspections may be performed. For representative inspections, personnel must inspect controls along the construction site for 0.25 mile above and below each access point where a roadway, undisturbed right-of-way, or other similar feature intersects the construction site and allows access to the areas described above. The conditions of the controls along each inspected 0.25 mile segment may be considered as representative of the condition of controls along

that reach extending from the end of the 0.25 mile segment to either the end of the next 0.25 mile inspected segment, or to the end of the project, whichever occurs first.

H. ***Inspection Report:*** For each inspection required above, you must complete an inspection report. At a minimum, the inspection report must include:
   1. The inspection date;
   2. Names, titles, and qualifications of personnel making the inspection;
   3. Weather information for the period since the last inspection (or since commencement of construction activity if the first inspection) including a best estimate of the beginning of each storm event, duration of each storm event, approximate amount of rainfall for each storm event (in inches), and whether any discharges occurred;
   4. Weather information and a description of any discharges occurring at the time of the inspection;
   5. Location(s) of discharges of sediment or other pollutants from the site;
   6. Location(s) of BMPs that need to be maintained;
   7. Location(s) of BMPs that failed to operate as designed or proved inadequate for a particular location;
   8. Location(s) where additional BMPs are needed that did not exist at the time of inspection; and
   9. Corrective action required including implementation dates.

The inspection report must be signed in accordance with Appendix G, Section 11 of this permit.

PART 5: STORMWATER POLLUTION PREVETNION PLANS (SWPPPs)

5.1 Stormwater Pollution Prevention Plan Framework

You must prepare a SWPPP <u>before</u> submitting your Notice of Intent (NOI) for permit coverage. At least one SWPPP must be developed for each construction project covered by this permit and the stormwater controls implemented at your site must be documented in the SWPPP. If you prepared a SWPPP for coverage under a previous NPDES permit, you must review and update the SWPPP prior to submitting your NOI.

The SWPPP does not contain effluent limitations; the technology and water quality-based effluent limitations are contained in Part 3 of this permit. The SWPPP is intended to document the selection, design, installation, and implementation of control measures that are being used to comply with the effluent limitations set forth in Part 3.

The SWPPP must:
   1. Identify all potential sources of pollutants that may reasonably be expected to affect the quality of stormwater discharges from the construction site; and
   2. Describe control measures to be used to meet the effluent limits set forth in Part 3.

5.2 SWPPP Contents: Site and Activity Description

A. ***Construction Site Operators:*** The SWPPP must identify all operators for the project site, and the areas of the site over which each operator has control.

B. ***Nature of Construction Activity:*** The SWPPP briefly must describe the nature of the construction activity, including:
   1. The function of the project (e.g., low density residential, shopping mall, highway, etc.);
   2. The intended sequence and timing of activities that disturb soils at the site;
   3. Estimates of the total area expected to be disturbed by excavation, grading, or other construction activities, including dedicated off-site borrow and fill areas; and
   4. A general location map (e.g., USGS quadrangle map, a portion of a city or county map, or other map) with enough detail to identify the location of the construction site and waters of the United States within one mile of the site.

C. ***Site Map:*** The SWPPP must contain a legible site map, showing the entire site, identifying:
   1. Direction(s) of stormwater flow and approximate slopes anticipated after grading activities;
   2. Areas of soil disturbance and areas that will not be disturbed (or a statement that all areas of the site will be disturbed unless otherwise noted);
   3. Locations of major structural and nonstructural BMPs identified in the SWPPP;
   4. Locations where stabilization practices are expected to occur;
   5. Locations of off-site material, waste, borrow or equipment storage areas;
   6. Locations of all waters of the United States (including wetlands);
   7. Locations where stormwater discharges to a surface water; and
   8. Areas where final stabilization has been accomplished and no further construction-phase permit requirements apply.

D. ***Construction and Waste Materials:*** The SWPPP must include a description of construction and waste materials expected to be stored on-site with updates as appropriate.

E. ***Locations of Other Industrial Stormwater Discharges:*** The SWPPP must describe and identify the location and description of any stormwater discharge associated with industrial activity other than construction at the site. This includes stormwater discharges from dedicated asphalt plants and dedicated concrete plants that are covered by this permit.

5.3 Description of Control Measures to Reduce Pollutant Discharges

A. ***Control Measures:*** The SWPPP must include a description of all control measures that will be implemented to meet the effluent limits in Part 3. For each major activity identified in the project description the SWPPP must clearly document appropriate control measures, the general sequence during the construction process in which the

measures will be implemented, and which operator is responsible for the control measure's implementation.

B. ***Stabilization:*** The SWPPP must include a description of interim and permanent stabilization practices for the site, including a schedule of when the practices will be implemented.

C. ***Post-Authorization Records:*** The following records must be maintained with the SWPPP following authorization under this permit:
   1. Dates when grading activities occur;
   2. Dates when construction activities temporarily or permanently cease on a portion of the site; and
   3. Dates when stabilization measures are initiated.

5.4 Non-Stormwater Discharges

The SWPPP must identify all allowable sources of non-stormwater discharges listed in Part 1.3.B of this permit, except for flows from fire fighting activities that are combined with stormwater discharges associated with construction activity at the site. The SWPPP must also describe the pollution prevention measures used to eliminate or reduce non-stormwater discharges consistent with Part 3.2.

5.5 Documentation of Permit Eligibility Related to Endangered Species

The SWPPP must include documentation supporting a determination of permit eligibility with regard to Endangered Species, including:

A. Information on whether federally-listed endangered or threatened species, or federally-designated critical habitat may be in the project area;

B. Whether such species or critical habitat may be adversely affected by stormwater discharges or stormwater discharge-related activities from the project;

C. Results of the Appendix C listed species and critical habitat screening determinations;

D. Confirmation of delivery of NOI to EPA or to EPA's electronic NOI system. This may include an overnight, express or registered mail receipt acknowledgment; or electronic acknowledgment from EPA's electronic NOI system;

E. Any correspondence for any stage of project planning between the U.S. Fish and Wildlife Service (FWS), EPA, the U.S. National Marine Fisheries Service (NMFS), or others and you regarding listed species and critical habitat, including any notification that delays your authorization to discharge under this permit; and

F. A description of measures necessary to protect federally-listed endangered or threatened species, or federally-designated critical habitat.

5.6 Documentation of Permit Eligibility Related to Total Maximum Daily Loads

The SWPPP must include documentation supporting a determination of permit eligibility with regard to waters that have an EPA-established or approved TMDL, including:

A. Identification of whether your discharge is identified, either specifically or generally, in an EPA-established or approved TMDL and any associated allocations, requirements, and assumptions identified for your discharge;

B. Summaries of consultation with State or Federal TMDL authorities on consistency of SWPPP conditions with the approved TMDL, and

C. Measures taken by you to ensure that your discharge of pollutants from the site is consistent with the assumptions and requirements of the EPA-established or approved TMDL, including any specific wasteload allocation that has been established that would apply to your discharge.

See Part 1.3.C.5 for further information on determining permit eligibility related to TMDLs.

5.7 Copy of Permit Requirements

Copies of this permit and of the signed and certified NOI form that was submitted to EPA must be included in the SWPPP. Also, upon receipt, a copy of the letter from the EPA Stormwater Notice Processing Center notifying you of their receipt of your administratively complete NOI must also be included as a component of the SWPPP.

5.8 Applicable State, Tribal, or Local Programs

The SWPPP must be updated as necessary to reflect any revisions to applicable federal, state, tribal, or local requirements that affect the stormwater controls you implement at your site.

5.9 Inspections

A record of each inspection and of any actions taken in accordance with Part 4 must be retained with the SWPPP for at least three years from the date that permit coverage expires or is terminated. The inspection reports must identify any incidents of non-compliance with the permit conditions. Where a report does not identify any incidents of non-compliance, the report must contain a certification that the construction project or site is in compliance with this permit.

5.10 Maintaining an Updated Plan

The SWPPP must be modified:

A. To reflect modifications to stormwater control measures made in response to a change in design, construction, operation, or maintenance at the construction site that has or could have a significant effect on the discharge of pollutants to the waters of the United States that has not been previously addressed in the SWPPP.

B. If during inspections or investigations by site staff, or by local, state, tribal or federal officials, it is determined that the existing stormwater controls are ineffective in eliminating or significantly minimizing pollutants in stormwater discharges from the construction site.

C. Based on the results of an inspection, as necessary to properly document additional or modified BMPs designed to correct problems identified. Revisions to the SWPPP must be completed within seven (7) calendar days following the inspection.

5.11 Signature, Plan Review and Making Plans Available

A. ***Retention of SWPPP:*** A copy of the SWPPP (including a copy of the permit), NOI, and acknowledgement letter from EPA must be retained at the construction site (or other location easily accessible during normal business hours to EPA, a state, tribal or local agency approving sediment and erosion plans, grading plans, or stormwater management plans; local government officials; the operator of a municipal separate storm sewer receiving discharges from the site; and representatives of the U.S. Fish and Wildlife Service or the National Marine Fisheries Service) from the date of commencement of construction activities to the date of final stabilization. If you have day-to-day operational control over SWPPP implementation, you must have a copy of the SWPPP available at a central location on-site for the use of all those identified as having responsibilities under the SWPPP whenever they are on the construction site. If an on-site location is unavailable to store the SWPPP when no personnel are present, notice of the plan's location must be posted near the main entrance at the construction site.

B. ***Main Entrance Signage:*** A sign or other notice must be posted conspicuously near the main entrance of the construction site. If displaying near the main entrance is infeasible, the notice can be posted in a local public building such as the town hall or public library. The sign or other notice must contain the following information:
   1. A copy of the completed Notice of Intent as submitted to the EPA Stormwater Notice Processing Center; and
   2. If the location of the SWPPP or the name and telephone number of the contact person for scheduling SWPPP viewing times has changed (i.e., is different than that submitted to EPA in the NOI), the current location of the SWPPP and name and telephone number of a contact person for scheduling viewing times.

   For linear projects, the sign or other notice must be posted at a publicly accessible location near the active part of the construction project (e.g., where a pipeline project crosses a public road).

C. ***Availability of SWPPP:*** SWPPPs must be made available upon request by EPA; a state, tribal or local agency approving sediment and erosion plans, grading plans, or stormwater management plans; local government officials; the operator of a municipal separate storm sewer receiving discharges from the site; and representatives of the U.S. Fish and Wildlife Service or the National Marine Fisheries Service to the requestor. The copy of the SWPPP that is required to be kept on-site or

locally available must be made available, in its entirety, to the EPA staff for review and copying at the time of an on-site inspection.

D. ***Signature and Certification:*** All SWPPPs must be signed and certified in accordance with Appendix G, Section 11.

5.12 Requirements for Different Types of Operators

You may meet one or both of the operational control components in the definition of operator found in Appendix A. Part 5.12.C applies to all permittees having control over only a portion of a construction site.

A. If you have operational control over construction plans and specifications, you must ensure that:
   1. The project specifications meet the minimum requirements of this Part and all other applicable permit conditions;
   2. The SWPPP indicates the areas of the project where the operator has operational control over project specifications, including the ability to make modifications in specifications;
   3. All other permittees implementing portions of the SWPPP (or their own SWPPP) who may be impacted by a change to the construction plan are notified of such changes in a timely manner; and
   4. The SWPPP indicates the name of the party(ies) with day-to-day operational control of those activities necessary to ensure compliance with the SWPPP or other permit conditions.

B. If you have operational control over day-to-day activities, you must ensure that:
   1. The SWPPP meets the minimum requirements of this Part and identifies the parties responsible for implementation of control measures identified in the plan;
   2. The SWPPP indicates areas of the project where you have operational control over day-to-day activities;
   3. The SWPPP indicates the name of the party(ies) with operational control over project specifications (including the ability to make modifications in specifications).

C. If you have operational control over only a portion of a larger project (e.g., one of four homebuilders in a subdivision), you are responsible for compliance with all applicable effluent limits, terms, and conditions of this permit as it relates to your activities on your portion of the construction site, including protection of endangered species, critical habitat, and historic properties, and implementation of control measures described in the SWPPP. You must ensure either directly or through coordination with other permittees, that your activities do not render another party's pollutant discharge controls ineffective. You must either implement your portion of a common SWPPP or develop and implement your own SWPPP.
   For more effective coordination of BMPs and opportunities for cost sharing, a cooperative effort by the different operators at a site to prepare and participate in a comprehensive SWPPP is encouraged. Individual operators at a site may, but are not

required to, develop separate SWPPPs that cover only their portion of the project provided reference is made to other operators at the site. In instances where there is more than one SWPPP for a site, cooperation between the permittees is encouraged to ensure the stormwater discharge control measures are consistent with one another (e.g., provisions to protect listed species and critical habitat).

PART 6: TERMINATION OF COVERAGE

6.1 Submitting a Notice of Termination

Submit a complete and accurate Notice of Termination (NOT) either electronically (strongly encouraged) at www.epa.gov/npdes/eNOI or by completing the paper Notice of Termination form included in Appendix F of this permit and submitting that form to the address listed in Part 2.2.

6.2 When to Submit a Notice of Termination

You may only submit a Notice of Termination (NOT) after one or more of the following conditions have been met:

A. Final stabilization has been achieved on all portions of the site for which you are responsible;

B. Another operator has assumed control according to Appendix G, Section 11.C over all areas of the site that have not been finally stabilized;

C. Coverage under an individual or alternative general NPDES permit has been obtained; or

D. For residential construction only, temporary stabilization has been completed and the residence has been transferred to the homeowner.

The NOT must be submitted within 30 days of one of the above conditions being met. Authorization to discharge terminates at midnight of the day the NOT is signed.

PART 7: RETENTION OF RECORDS

Copies of the SWPPP and all documentation required by this permit, including records of all data used to complete the NOI to be covered by this permit, must be retained for at least three years from the date that permit coverage expires or is terminated. This period may be extended by request of EPA at any time.

PART 8: REOPENER CLAUSE

8.1 Procedures for Modification or Revocation

Permit modification or revocation will be conducted according to 40 CFR §122.62, §122.63, §122.64 and §124.5.

8.2 Water Quality Protection

If there is evidence indicating that the stormwater discharges authorized by this permit cause, have the reasonable potential to cause or contribute to an excursion above any applicable water quality standard, you may be required to obtain an individual permit in accordance with Part 2.6 of this permit, or the permit may be modified to include different limitations and/or requirements.

8.3 Timing of Permit Modification

EPA may elect to modify the permit prior to its expiration (rather than waiting for the new permit cycle) to comply with any new statutory or regulatory requirements, such as for effluent limitation guidelines that may be promulgated in the course of the current permit cycle.

PART 9: STANDARD PERMIT CONDITIONS

The federal regulations require that the Standard Conditions provisioned at 40 CFR §122.41 be applied to all NPDES permits. You are required to comply with those Standard Conditions, details of which are provided in Appendix G.

PART 10: PERMIT CONDITIONS APPLICABLE TO SPECIFIC STATES, INDIAN COUNTRY, OR TERRITORIES

The provisions of this Part provide modifications or additions to the applicable conditions of this permit to reflect specific additional conditions required as part of the state or tribal CWA Section 401 certification process, or the Coastal Zone Management Act (CZMA) certification process, or as otherwise established by the permitting authority. The specific additional revisions and requirements only apply to activities in those specific states, Indian country, and federal facilities. States, Indian country, and federal facilities not included in this Part do not have any modifications or additions to the applicable conditions of this permit.

A. Region 1

1. MAR100000: Commonwealth of Massachusetts, except Indian country
   a. State Water Quality Statutes, Regulations, and Policies:
      i. You must comply with the Massachusetts Clean Waters Act (Ch. 21, ss. 26-53).
      ii. You must comply with the conditions in 314 CMR 4.00 - Surface Water Quality Standards.
      iii. You must comply with the conditions in 314 CMR 3.00 - Surface Water Discharge Permit Program.
      iv. You must comply with the Wetlands Protection Act, Ch. 131, s. 40 and its regulations, 310 CMR 10.00 and any order of Conditions issued by a Conservation Commission or a Superseding Order of Conditions issued by the Massachusetts Department of Environmental Protection.
   b. Department of Environmental Protection Storm Water Management Policy:

i. You must comply with the Massachusetts Storm Water Management Policy, and applicable Storm Water Performance Standards, as prescribed by state regulations promulgated under the authority of the Massachusetts Clean Waters Act, MGL Ch. 21, ss. 26-53 and the Wetlands Protection Act Ch. 131, s. 40.

c. Other State Environmental Laws, Regulations, Policies:

i. You must comply with the Massachusetts Endangered Species Act [MESA] (MGL Ch. 313A and regulations at 321 CMR 10.00) and any actions undertaken to comply with this storm water permit, shall not result in non-compliance with the MESA.

ii. You must not conduct activities under this permit that will interfere with implementation of mosquito control work conducted in accordance with Chapter 252 including, s. 5A thereunder and MassDEP Guideline Number BRP G01-02, West Nile Virus Application of Pesticides to Wetland Resource Areas and Buffer Zones, and Public Water Systems.

d. Other Department Directives:

i. The Department may require you to perform water quality monitoring during the permit term if monitoring is necessary for the protection of public health or the environment as designated under the authority at 314 CMR 3.00.

ii. The Department may require you to provide measurable verification of the effectiveness of BMPs and other control measures in your management program, including water quality monitoring.

iii. The Department has determined that compliance with this permit does not protect you from enforcement actions deemed necessary by the Department under its associated regulations to address an imminent threat to the public health or a significant adverse environmental impact which results in a violation of the Massachusetts Clean Waters Act, Ch. 21, ss. 26-53.

iv. The Department reserves the right to modify the 401 Water Quality Certification if any changes, modifications or deletions are made to the general permit. In addition, the Department reserves the right to add and/or alter the terms and conditions of its 401 Water Quality Certification to carry out its responsibilities during the term of this permit with respect to water quality, including any revisions to 314 CMR 4.00, Surface Water Quality Standards.

e. Permit Compliance

i. Should any violation of the Massachusetts Surface Water Quality Standards (314 CMR 4.00) or the conditions of this certification occur, the Department will direct you to correct the violations(s). The Department has the right to take any action as authorized by the General Laws of the Commonwealth to address the violation of this permit or the MA Clean Waters Act and the regulations promulgated thereunder. Substantial civil and criminal penalties are authorized under MGL Ch. 21, s. 42 for discharging into Massachusetts' waters in violation of an order or permit issued by this Department. This

certification does not relieve you of the duty to comply with other applicable Massachusetts statutes and regulations.

2. NHR100000: State of New Hampshire [RESERVED]

B. Region 2 – [RESERVED]

C. Region 6

1. NMR100000: The State of New Mexico, except Indian country
   a. In addition to all other provisions of this permit, operators who intend to obtain authorization under this permit for all new stormwater discharges must satisfy the conditions in Part 10.C.1.b., unless a TMDL has been established for the receiving stream which specifies a waste load allocation (WLA) for construction stormwater discharges or the receiving stream is a Tier 3 water, in which case Part 10.C.1.c. applies.
   b. The SWPPP must include site-specific interim and permanent stabilization, managerial, and structural solids, erosion, and sediment control best management practices (BMPs) and/or other controls that are designed to prevent to the maximum extent practicable an increase in the sediment yield and flow velocity from pre-construction, pre-development conditions to assure that applicable standards in 20.6.4 NMAC, including the antidegradation policy, or WLAs are met. This requirement applies to discharges both during construction and after construction operations have been completed. The SWPPP must identify, and document the rationale for selecting these BMPs and/or other controls. The SWPPP must also describe design specifications, construction specifications, maintenance schedules (including a long term maintenance plan), criteria for inspections, as well as expected performance and longevity of these BMPs. BMP selection must be made based on the use of appropriate soil loss prediction models (such as SEDCAD 4.0, RUSLE, SEDIMOT II, MULTISED, etc.), or equivalent, generally accepted (by professional erosion control specialists), soil loss prediction tools. The operator(s) must demonstrate, and include documentation in the SWPPP, that implementation of the site-specific practices will assure that the applicable standards or WLAs are met, and will result in sediment yields and flow velocities that, to the maximum extent practicable, will not be greater than the sediment yield levels and flow velocities from pre-construction, pre-development conditions. The SWPPP must be prepared in accordance with good engineering practices by qualified (e.g., CPESC certified, engineers with appropriate training, etc.) erosion control specialists familiar with the use of soil loss prediction models and design of erosion and sediment control systems based on these models (or equivalent soil loss prediction tools). The operator(s) must design, implement, and maintain BMPs in the manner specified in the SWPPP.
   c. Operators are not eligible to obtain authorization under this permit for all new stormwater discharges to outstanding national resource waters (ONRWs) (also referred to as "Tier 3: waters). According to the Antidegradation Policy at Paragraph 3 of Subsection A of 20.6.4.8 NMAC, in part, "ONRWs may include,

but are not limited to, surface waters of the state within national and state monuments, parks, wildlife refuges, waters of exceptional recreational or ecological significance, and waters identified under the Wild and Scenic Rivers Act." No ONRWs exist at the time this permit is being finalized; however, during the term of the permit, if a receiving water is designated as an ONRW, the operator must obtain an individual permit for stormwater discharges from large and small construction activities.

d. Stormwater discharges associated with construction activity that the State has determined to be or may reasonably be expected to be contributing to a violation of an applicable standard, including the antidegradation policy, are not authorized by this permit. *Note: Upon receipt of this determination, NMED anticipates that, within a reasonable period of time, EPA will notify the general permittee to apply for and obtain an individual NPDES permit for these discharges per 40 CFR Part 122.28(b)(3).*
e. Inspections required under Part 4 must be conducted at least once every 14 calendar days and within 24 hours of the end of a storm event of 0.5 inches or greater. The option for inspections at least once per 7 calendar days is not available. The Inspection Waivers provided in Part 4.B and C still apply.
f. Permittees can use temporary erosion controls as described in item 3 of the Appendix A definition of "Final Stabilization" as a method for final stabilization under the permit only under the following conditions:

   If this option is selected, you must notify SWQB at the address listed in item g. below at the time the NOT is submitted to EPA. The information to be submitted includes:

- A copy of the NOT;
- Contact information, including individual name or title, address, and phone number for the qualified (see CGP Part 4.10.D) party responsible for implementing the final stabilization measures; and
- The date that the temporary erosion control practice was implemented (this is always prior to, and sometimes significantly prior to, submission of an NOT) and the projected timeframe that the 70% native vegetative cover requirements are expected to be met. (Note that if more than three years is required to establish 70 percent of the natural vegetative cover, this technique cannot be used or cited for fulfillment of the final stabilization requirement – you remain responsible for establishment of final stabilization)

   SWQB also requires that you periodically (minimum once/year) inspect and properly maintain the area until the criteria for final stabilization, as defined in Appendix A, item 3 of the CGP, have been met. You must prepare an inspection report documenting the findings of these inspections and signed in accordance with Appendix G, Section 11 of the CGP. This inspection record must be retained along with the SWPPP for three years after the NOT is submitted for the site and additionally submitted to SWQB at the address listed in item g. below. The inspections must at a minimum include the following:

- Observations of all areas of the site disturbed by construction activity;
- Best Management Practices (BMPs)/post-construction storm water controls must be observed to ensure they are effective;
- An assessment of the status of vegetative re-establishment; and
- Corrective actions required to ensure vegetative success within three years, and control of pollutants in storm water runoff from the site, including implementation dates.

g. Signed copies of discharge monitoring reports, individual permit applications, and all other reports required by the permit to be submitted, shall also be sent to:

Program Manager
Point Source Regulation Section
Surface Water Quality Bureau
New Mexico Environment Department
P.O. Box 26110
Santa Fe, NM 87502

2. NMR15000I: Indian country within the State of New Mexico, except Navajo Reservation Lands that are covered under Arizona permit AZR10000I and Ute Mountain Reservation Lands that are covered under Colorado permit COR10000I [RESERVED]
3. OKR15000F: Discharges in the State of Oklahoma that are not under the authority of the Oklahoma Department of Environmental Quality, including activities associated with oil and gas exploration, drilling, operations, and pipelines (includes SIC Groups 13 and 46, and SIC codes 492 and 5171), and point source discharges associated with agricultural production, services, and silviculture (includes SIC Groups 01, 02, 07, 08, 09). [RESERVED]

D. Region 8 [RESERVED]

E. Region 9

1. ASR100000: The Island of American Samoa
   a. Discharges authorized by the general permit shall meet all applicable American Samoa water quality standards.
   b. Permittees discharging under the general permit shall comply with all conditions of the permit.
2. AZR10000I: Indian country lands within the State of Arizona, including Navajo Reservation lands in New Mexico and Utah
   a. White Mountain Apache Tribe. The following condition applies only for projects on the White Mountain Apache Reservation: All NOIs for proposed stormwater discharge coverage shall be provided to the following address:

      Tribal Environmental Planning Office
      P.O. Box 2109
      Whiteriver, AZ 85941

b. Hoopa Valley Tribe. The following conditions apply only for projects on the Hoopa Valley Reservation:

   i. All notices of intent submitted for stormwater discharges under the general permit in Hoopa Valley Indian Reservation (HVIR) shall be submitted to the Tribal Environmental Protection Agency (TEPA); and

   ii. All pollution prevention plans for stormwater discharge in HVIR shall be submitted to TEPA for review and approval.

c. 29 Palms Band of Mission Indians. The following conditions apply only for projects on the 29 Palms Band of Mission Indians Reservation:

   i. The 29 Palms Tribal EPA is informed of any future changes made to the proposed CGP;

   ii. For each permitted activity, the U.S. EPA will ensure that all terms and conditions of the proposed CGP are complied with;

   iii Notices of intent must be submitted to the 29 Palms Tribal EPA for review, comment and tracking;

   iv. Copies of stormwater pollution prevention plans (SWPPPs) and supporting Best Management Practices (BMPs) must be submitted to the 29 Palms Tribal EPA for review and compliance;

   v. Copies of all monitoring reports must be provided to the 29 Palms Tribal EPA;

   vi. Depending on the permitted activity, the 29 Palms Tribal EPA reserves the right to stipulate additional monitoring requirements; and

   vii. In order to meet the requirements of Tribal law, including water quality standards, each of the conditions cited in the proposed CGP and the Twenty-Nine Palms Band of Mission Indians certification shall not be made any less stringent.

d. Hualapai Tribe. The following conditions apply only for projects on the Hualapai Reservation:

   i. All notices of intent for proposed stormwater discharges under the CGP and all pollution prevention plans for stormwater discharges on Hualapai Tribal lands shall be submitted to the Water Resource Program through the Tribal Chairman for review and approval, P.O. Box 179, Peach Springs, AZ 86434.

e. Pyramid Lake Paiute Tribe. The following conditions apply only for projects on the Pyramid Lake Paiute Reservation:

   i. All notices of intent (NOIs) must be submitted to the Tribe for review, comments and tracking;

   ii. copies of all Stormwater Pollution Prevention Plan (SWPPPs) and supporting Best Management Practices (BMPs) must be submitted to the Pyramid Lake Paiute Tribe for review and concurrence;

iii. copies of the criteria for Effluent Limitations Guidelines (ELGs) and the criteria for proposed Qualifying Local Programs (QLPs) to be used for sediment and erosion control pursuant to 40 CFR 122.44(s) be provided to the Pyramid Lake Paiute Tribe; and

iv. copies of all monitoring reports must be provided to the Pyramid Lake Paiute Tribe.

3. MPR100000: Commonwealth of the Northern Mariana Islands (CNMI)
   a. An Earthmoving and Erosion Control Permit shall be obtained from the CNMI DEQ prior to any construction activity covered under the NPDES general permit.
   b. All conditions and requirements set forth in the USEPA NPDES general permit for discharges from large and small construction must be complied with.
   c. A SWPPP for storm water discharges from construction activity must be approved by the Director of the CNMI DEQ prior to the submission of the NOI to USEPA. The CNMI address for the submittal of the SWPPP for approval is:

      Commonwealth of the Northern Mariana Islands
      Office of the Governor
      Director, Division of Environmental Quality (DEQ)
      P.O. Box 501304 C.K.
      Saipan, MP 96950-1304

   d. An NOI to be covered by the general permit for discharges from large and small construction sites must be submitted to CNMI DEQ (use above address) and USEPA, Region 9, in the form prescribed by USEPA, accompanied by a SWPPP approval letter from CNMI DEQ.
   e. The NOI must be postmarked seven (7) calendar days prior to any storm water discharges and a copy must be submitted to the Director of CNMI DEQ (use above address) no later than seven (7) calendar days prior to any stormwater discharges.
   f. Copies of all monitoring reports required by the NPDES general permit must be submitted to CNMI DEQ (use above address).
   g. In accordance with section 10.3(h) and (i) of the CNMI water quality standards, CNMI DEQ reserves the right to deny coverage under the general permit and to require submittal of an application for an individual NPDES permit based on a review of the NOI or other information made available to the Director.

F. Region 10

1. AKR100000: The State of Alaska, except Indian country
   a. For Storm Water Pollution Prevention Plans
      i. Operators of construction projects disturbing at least one acre of land but less than five acres of land shall submit a copy of the Notice of Intent (NOI) to the Alaska Department of Environmental Conservation (ADEC) at the same time it is submitted to the EPA. Submittals to ADEC shall be made to the following address

         Alaska Department of Environmental Conservation

Wastewater Discharge/Storm Water
555 Cordova St.
Anchorage, AK 99501

ii. Operators of construction projects that disturb five or more acres of land and that are located outside the areas of the local governments described in numbers iii, iv, v, or vi below, shall submit a copy of the Storm Water Pollution Prevention Plan (SWPPP) and a copy of the NOI to ADEC for review. The SWPPP shall be accompanied by the state-required plan review fee (see 18 AAC 72.955).

iii. Within the Municipality of Anchorage

(1) Operators of construction projects disturbing one or more acres of land shall submit a copy of the SWPPP to either ADEC or the Municipality based on the project type and operator as shown in the following table

Project Type	Submit SWPPP to
Government (federal, state, municipal) road projects and other government transportation projects such as ports, railroads or airports	ADEC
Utility projects for which the utility is initiating the work	Municipality
Work that requires a Building Permit	Municipality
Non-publicly funded transportation projects	Municipality

(2) Submittal of the SWPPP to the Municipality should be made before or at the same time the NOI is submitted to the EPA and ADEC and shall be accompanied by any Municipality-required fee. Copies of the SWPPP shall be submitted to the Municipality at the following address

Municipality of Anchorage
Office of Planning Development and Public Works
4700 South Elmore Rd.
PO Box 196650
Anchorage, AK 99519-6650

(3) Submittals to ADEC shall include a copy of the SWPPP and a copy of the NOI for review and shall be accompanied by the state-required plan review fee (see 18 AAC 72.995).

iv. Within the urbanized area boundary of the Fairbanks North Star Borough check with the Borough for the latest requirements.

Fairbanks North Star Borough
Department of Public Works
PO Box 71267
Fairbanks, AK 99707

v. Within the urbanized area boundary of the City of Fairbanks

(1) Operators of privately-funded construction projects disturbing one or more acres of land shall submit a copy of the SWPPP to the City of Fairbanks.

(2) Submittal of the SWPPP to the City of Fairbanks should be made before or at the same time the NOI is submitted to the EPA and

ADEC and shall be accompanied by any City-required fee. Copies of the SWPPP shall be submitted to the City of Fairbanks at the following address

City of Fairbanks
Engineering Division
800 Cushman St
Fairbanks, AK 99701

(3) Operators of publicly-funded projects disturbing one or more acres of land shall submit a copy of the SWPPP and a copy of the NOI to ADEC for review, and shall be accompanied by the state-required plan review fee (see 18 AAC 72.995).

vi. Within the urbanized area boundary of the City of North Pole

(1) Operators of privately-funded construction projects disturbing one or more acres of land shall submit a copy of the SWPPP to the City of North Pole.

(2) Submittal of the SWPPP to the City of North Pole should be made before or at the same time the NOI is submitted to the EPA and ADEC and shall be accompanied by any City-required fee. Copies of the SWPPP shall be submitted to the City of North Pole at the following address

City of North Pole
Department of Public Works
125 Snowman Lane
North Pole, AK 99705

(3) Operators of publicly-funded projects disturbing one or more acres of land shall submit a copy of the SWPPP and a copy of the NOI to ADEC for review, and shall be accompanied by the state-required plan review fee (see 18 AAC 72.995).

vii. For hardrock mines that are designed to process 500 or more tons per day and intend to file a Notice of Intent to begin construction under this permit

(1) The operator shall submit their SWPPP to ADEC for review at least 90 days before the start of construction,

(2) Representatives of the operator and the prime site construction contractor shall meet with ADEC representatives in a pre-construction conference at least 20 days before the start of construction to discuss the details of the SWPPP and stormwater management during construction,

(3) The operator shall submit to ADEC addendums to the SWPPP that address any planned physical alterations, additions to the permitted facility, or unanticipated conditions that arise during planned construction that could significantly change the nature, or increase the quantity, of pollutants discharged from the facility, and

(4) The operator shall have at least one person on-site during construction who is qualified and trained in the principles and practices of erosion and sediment control and has the authority to direct the maintenance of storm water best management practices.

b. For Post-Construction (Permanent) Storm Water Control Measures (Section 3.1.E *[Post-Construction Stormwater Management]* of the CGP)
   i. Operators of construction projects who construct, alter, install, modify, or operate any part of a storm water treatment system and are located outside the Municipality of Anchorage, shall submit a copy of the engineering plans to ADEC for review at the address given above (see 18 AAC 72.600).
   ii. Operators of construction projects who construct, alter, install, modify, or operate any part of a storm water treatment system and are located inside the Municipality of Anchorage, shall submit a copy of the engineering plans to the respective government agency based on project type, as indicated in the table in a.iii.*(1)* above, for review at the addresses given in a.i. or a.iii.*(2)* above.

2. IDR100000: The State of Idaho, except Indian country
   a. *303(d)-listed Water Bodies with Approved TMDLs.*
      Discharges of storm water will be consistent with load allocations established by the applicable TMDL.
   b. *303(d)-listed Water Bodies without Approved TMDLs (High Priority)*
      If a TMDL has not been established for a high priority 303(d)-listed water body, then discharges of storm water may not cause an increase in the total load of listed pollutant(s) in the receiving water body.
   c. *303(d)-listed Water Bodies without Approved TMDLs (Medium or Low Priority)*
      If a TMDL has not been established for a medium or low priority 303(d)-listed water body, then best management practices shall be employed as necessary to prohibit further impairment of the designated or existing beneficial uses in the receiving water body.
   d. *Best Management Practices (BMPs)*
      BMPs must be designed, implemented, and maintained by the permittee to fully protect and maintain the beneficial uses of the receiving water body. The permittee should select appropriate BMPs that are either authorized by the appropriate designated agency as defined in Idaho Water Quality Standards (IDAPA 58.01.02), recommended in IDEQ's *Catalog of Stormwater BMPs for Idaho Cities and Counties*, or recommended by other local government entities or guidance documents.
   e. *Equivalent Analysis Waiver* - Use of the "Equivalent Analysis Waiver" in Appendix D of the permit is not authorized.
   f. Operators may contact the Idaho Department of Environmental Quality regional office nearest the construction activity for more information about impaired waterways:
      <u>Boise Regional Office:</u>
      1445 N. Orchard
      Boise ID 83706-2239
      Tel: (208)373-0550
      Fax: (208)373-0287

Grangeville Satellite Office:
300 W. Main
Grangeville ID 83530
Tel: (208)983-0808
Fax: (208)983-2873

Pocatello Regional Office:
444 Hospital Way #300
Pocatello ID 83201
Tel: (208)236-6160
Fax: (208)236-6168

McCall Satellite Office:
502 N. 3rd Street #9A
P.O. Box 4654
McCall, ID 83638
Tel: (208)634-4900
Fax: (208)634-9405

Idaho Falls Regional Office:
900 N. Skyline, Suite B
Idaho Falls, ID 83402
Tel: (208)528-2650
Fax: (208)528-2695

Twin Falls Regional Office:
1363 Fillmore
Twin Falls, ID 83301
Tel: (208)736-2190
Fax: (208)736-2194

Coeur d'Alene Regional Office:
2110 Ironwood Parkway
Coeur d'Alene ID 83814
Tel: (208)769-1422
Fax: (208)769-1404

Lewiston Regional Office:
1118 "F" Street
Lewiston, ID 83501
Tel: (208)799-4370
Toll Free: 1-877-541-3304
Fax: (208)799-3451

3. ORR10000I: Indian country within the State of Oregon, except Fort McDermitt Reservation lands (see Region 9):

a. Confederated Tribes of the Umatilla Indian Reservation.
   The following conditions apply only for projects within the exterior boundaries of the Umatilla Indian Reservation:
   i. The operator shall be responsible for achieving compliance with the Confederated Tribes of the Umatilla Indian Reservation's (CTUIR) Water Quality Standards.
   ii. The operator must submit all Storm Water Pollution Prevention Plans required under this general permit to the CTUIR Water Resources Program for review and determination that the SWPPP is sufficient to meet Tribal Water Quality Standards prior to the beginning of any discharge activities taking place.
   iii. The operator must submit a copy of the Notice of Intent (NOI) to be covered by this general permit to the CTUIR Water Resources Program at the address below, at the same time it is submitted to EPA.
   iv. The operator shall be responsible for reporting an exceedance of Tribal Water Quality Standards to the CTUIR Water Resources Program at the same time it is reported to EPA.
      Confederated Tribes of the Umatilla Indian Reservation
      Water Resources Program
      P.O. Box 638
      Pendleton, OR 97801
      (541) 966-2420
   v. At least 45 days prior to beginning any discharge activities, the operator must submit a copy of the Notice of Intent to be covered under this general permit and an assessment of whether the undertaking has the potential to affect historic properties to CTUIR Tribal Historic Preservation Office (THPO) at the address below. If the project has potential to affect historic properties, the operator must define the area of potential effect (APE). The operator must provide the THPO at least 30 days to comment on the APE as defined.
   vi. If the project is an undertaking, the operator must conduct a cultural resource investigation. All fieldwork must be conducted by qualified personnel (as outlined by the Secretary of the Interior's Standards and Guidelines found at http://www.nps.gov/history/local-law-arch_stnds_0.htm). All fieldwork must be documented using Oregon Reporting Standards (as outlined at http://egov.oregon.gov/OPRD/HCD/ARCH/arch_pubsandlinks.shtml). The resulting report must be submitted to the THPO for concurrence before any ground disturbing work can occur. The operator must provide the THPO at least 30 days to review and respond to all reports.
      The operator must obtain THPO concurrence in writing. If historic properties are present, this written concurrence will outline measures to be taken to prevent or mitigate effects to historic properties.

Confederated Tribes of the Umatilla Indian Reservation
Cultural Resources Protection Program
Tribal Historic Preservation Office
P.O. Box 638
Pendleton, OR 97801
(541) 966-2340

b. Confederated Tribes of Warm Springs.
The following conditions apply only for projects on the Warm Springs Indian Reservation:
   i. All activities covered by this NPDES general permit occurring within a designated riparian buffer zone as established in Ordinance 74 (Integrated Resource Management Plan or IRMP) must be reviewed, approved and permitted through the Tribe's Hydraulic Permit Application process, including payment of any applicable fees.
   ii. All activities covered by this NPDES general permit must follow all applicable land management and resource conservation requirements specified in the IRMP.
   iii. Operators of activities covered by this NPDES general permit must submit a Storm Water Pollution Prevention Plan to the Tribe's Water Control Board at the following address for approval at least 30 days prior to beginning construction activity:

Chair, Warm Springs Water Control Board
P.O. Box C
Warm Springs, Oregon 97761

4. WAR10000F: Federal Facilities in the State of Washington, except those located on Indian Country

a. Discharges shall not cause or contribute to a violation of surface water quality standards (Chapter 173-201A WAC), ground water quality standards (Chapter 173-200 WAC), sediment management standards (Chapter 173-204 WAC), and human health-based criteria in the National Toxics Rule (40 CFR Part 131.36). Discharges that are not in compliance with these standards are not authorized.
b. Prior to the discharge of stormwater and non-stormwater to waters of the state, the Permittee shall apply all known, available, and reasonable methods of prevention, control, and treatment (AKART). This includes the preparation and implementation of an adequate Stormwater Pollution Prevention Plan (SWPPP), with all appropriate best management practices (BMPs) installed and maintained in accordance with the SWPPP and the terms and conditions of this permit.
c. Sampling & Numeric Effluent Limitations – For Sites Discharging to Certain Waterbodies on the 303(d) List or with an Applicable TMDL
   i. Permittees that discharge to water bodies listed as impaired by the State of Washington under Section 303(d) of the Clean Water Act for turbidity, fine sediment, high pH or phosphorus, shall conduct water quality sampling according to the requirements of this section.
      (1) The operator must retain all monitoring results required by this section as part of the SWPPP. All data and related monitoring records must be

provided to EPA or the Washington Department of Ecology upon request.

(2) The operator must notify EPA when the discharge turbidity or discharge pH exceeds the water quality standards as defined in Parts 10.F.4.d.ii and e.ii below, in accordance with the reporting requirements of Part G.12.F of this permit. All reports must be submitted to EPA at the following address:
U.S EPA Region 10
NPDES Compliance Unit - Attn: Federal Facilities Compliance Officer
1200 6th Avenue, Suite 900
OCE-133
Seattle, WA 98101
(206) 553-1846

ii. All references and requirements associated with Section 303(d) of the Clean Water Act mean the most current listing by Ecology of impaired waters that exists on November 16, 2005, or the date when the operator's complete NOI is received by EPA, whichever is later.

Parameter identified in 303(d) listing	**Paramete r/Units**	Analytical Method	Sampling Frequency	Water Quality Standard
Turbidity Fine Sediment Phosphorus	Turbidity/NTU	SM2130 or EPA180.1	Weekly, if discharging	If background is 50 NTU or less: 5 NTU over background; or If background is more than 50 NTU: 10% over background
High pH	pH/Standard Units	pH meter	Weekly, if discharging	In the range of 6.5 – 8.5

d. Discharges to waterbodies on the 303(d) list for turbidity, fine sediment, or phosphorus

i. Permittees which discharge to waterbodies on the 303(d) list for turbidity, fine sediment, or phosphorus shall conduct turbidity sampling at the following locations to evaluate compliance with the water quality standard for turbidity:

(1) Background turbidity shall be measured in the 303(d) listed receiving water immediately upstream (upgradient) or outside the area of influence of the discharge; and

(2) Discharge turbidity shall be measured at the point of discharge into the 303(d) listed receiving waterbody, inside the area of influence of the discharge; **or**
Alternatively, discharge turbidity may be measured at the point where the discharge leaves the construction site, rather than in the receiving waterbody.

ii. Based on sampling, if the discharge turbidity ever exceeds the water quality standard for turbidity (more than 5 NTU over background turbidity when the background turbidity is 50 NTU or less, or more than a 10% increase in turbidity when the background turbidity is more than 50 NTU), all future discharges shall comply with a numeric effluent limit which is equal to the water quality standard for turbidity. If a future discharge exceeds the water quality standard for turbidity, the permittee shall:

(1) Review the SWPPP for compliance with the permit and make appropriate revisions within 7 days of the discharge that exceeded the standard;

(2) Fully implement and maintain appropriate source control and/or treatment BMPs as soon as possible, but no later than 10 days of the discharge that exceeded the standard;

(3) Document BMP implementation and maintenance in the site log book;

(4) Continue to sample daily until discharge turbidity meets the water quality standard for turbidity.

e. Discharges to waterbodies on the 303(d) list for High pH

i. Permittees which discharge to waterbodies on the 303(d) list for high pH shall conduct sampling at one of the following locations to evaluate compliance with the water quality standard for pH (in the range of 6.5 – 8.5):

(1) pH shall be measured at the point of discharge into the 303(d) listed waterbody, inside the area of influence of the discharge; or

(2) Alternatively, pH may be measured at the point where the discharge leaves the construction site, rather than in the receiving water.

ii. Based on the sampling set forth above, if the pH ever exceeds the water quality standard for pH (in the range of 6.5 – 8.5), all future discharges shall comply with a numeric effluent limit which is equal to the water quality standard for pH. If a future discharge exceeds the water quality standard for pH, the permittee shall:

(1) Review the SWPPP for compliance with the permit and make appropriate revisions within 7 days of the discharge;

(2) Fully implement and maintain appropriate source control and/or treatment BMPs as soon as possible, but no later than 10 days of the discharge that exceeded the standards;

(3) Document BMP implementation and maintenance in the site log book;

(4) Continue to sample daily until discharge meets the water quality standard for pH (in the range of 6.5 – 8.5).

f. Sampling & Limitations – For Sites Discharging to TMDLs

i. Discharges to waterbodies subject to an applicable Total Maximum Daily Load (TMDL) for turbidity, fine sediment, high pH, or phosphorus, shall be consistent with the assumptions and requirements of the TMDL.

(1) Where an applicable TMDL sets specific waste load allocations or requirements for discharges covered by this permit, discharges shall be consistent with any specific waste load allocations or requirements established by the applicable TMDL.

a. Discharges shall be sampled weekly, or as otherwise specified by the TMDL, to evaluate compliance with the specific waste load allocations or requirements.

b. Analytical methods used to meet the monitoring requirements shall conform to the latest revision of the Guidelines Establishing Test Procedures for the Analysis of Pollutants contained in 40 CFR Part 136.

(2) Where an applicable TMDL has established a general waste load allocation for construction stormwater discharges, but no specific requirements have been identified, compliance with this permit will be assumed to be consistent with the approved TMDL.

(3) Where an applicable TMDL has not specified a waste load allocation for construction stormwater discharges, but has not excluded these discharges, compliance with this permit will be assumed to be consistent with the approved TMDL.

(4) Where an applicable TMDL specifically precludes or prohibits discharges from construction activity, the operator is not eligible for coverage under this permit.

ii. Applicable TMDL means a TMDL for turbidity, fine sediment, high pH, or phosphorus, which has been completed and approved by EPA prior to November 16, 2005, or prior to the date the operator's complete NOI is received by EPA, whichever is later.
Information on impaired waterways is available from the Department of Ecology website at:
http://www.ecy.wa.gov/programs/wq/stormwater/construction/impaired.html
or by phone: 360-407-6460.

5. WAR10000I: Indian country within the State of Washington

a. Kalispel Tribe.

The following conditions apply only for projects on the Kalispel Reservation:

i. The permittee shall be responsible for achieving compliance with the Kalispel Tribe's Water Quality Standards.

ii. The permittee shall submit a copy of the Notice of Intent (NOI) to be covered by the general permit to the Kalispel Tribe Natural Resources Department at the same time as it submitted to the U.S. EPA

iii. The permittee shall submit all Storm Water Prevention Plans (SWPP) to the Kalispel Tribe Natural Resources Department thirty (30) days prior to beginning any discharge activities for review.

iv. Prior to any land disturbing activities on the Kalispel Indian Reservation and its dependent communities, the permittee shall obtain a cultural resource clearance letter from the Kalispel Natural Resource Department.

v. All tribal correspondence pertaining to the general permit for discharges of construction stormwater shall be sent to:

Kalispel Tribe Natural Resources Department
PO Box 39
Usk, WA 99180

b. Lummi Nation

The following conditions apply only for projects on the Lummi Reservation:

i. Pursuant to Lummi Code of Laws (LCL) 17.05.020(a), the operator must obtain a land use permit from the Lummi Planning Department as provided in Title 15 of the Lummi Code of Laws and regulations adopted thereunder.

ii. Pursuant to LCL 17.05.020(a), each operator shall develop and submit a Storm Water Pollution Prevention Plan to the Lummi Water Resources Division for review and approval by the Water Resources Manager prior to beginning any discharge activities.

iii. Pursuant to LCL Title 17, each operator shall be responsible for achieving compliance with the Water Quality Standards for Surface Waters of the Lummi Indian Reservation (Lummi Administrative Regulations [LAR] 17 LAR 07.010 through 17 LAR 07.210).

iv. Each operator shall submit a copy of the Notice of Intent to the Lummi Water Resources Division at the same time it is submitted to the Environmental Protection Agency (EPA).

v. Storm Water Pollution Prevention Plans and Notices of Intent shall be submitted to:

Lummi Natural Resources Department
ATTN: Water Resources Manager
2616 Kwina Road
Bellingham, WA 98226

vi. Refer to the Lummi Nation website at *http://www.lummi-nsn.gov* to review a copy of Title 17 of the Lummi Code of Laws and the references upon which the conditions identified above are based.

c Makah Tribe

The following conditions apply only for projects on the Makah Reservation:

i. The operator shall be responsible for achieving compliance with the Makah Tribe's Water Quality Standards.

ii. The operator shall submit a Storm Water Pollution Prevention Plan to the Makah Tribe Water Quality Program and Makah Fisheries Habitat Division for review and approval at least thirty (30) days prior to beginning any discharge activities.

iii. The operator shall submit a copy of the Notice of Intent to the Makah Tribe Water Quality Program and Makah Fisheries Habitat Division at the same time it is submitted to EPA.

iv. Storm Water Pollution Prevention Plans and Notices of Intent shall be submitted to:

Makah Fisheries Water Quality and Habitat Division
PO Box 115
Neah Bay, WA 98357

d. Puyallup Tribe of Indians.
The following conditions apply only to stormwater discharges from large and small construction activities that result in a total land disturbance of equal to or greater than one acre, where those discharges enter surface waters of the Puyallup Tribe:

i. Each permittee shall be responsible for achieving compliance with the Puyallup Tribe's Water Quality Standards, including antidegradation provisions. The Puyallup Natural Resources Department will conduct an antidegradation review for permitted activities that have the potential to affect water quality. The antidegradation review will be consistent with the Tribe's Antidegradation Implementation Procedures.

ii. The permittee shall be responsible for meeting any additional permit requirements imposed by EPA necessary to comply with the Puyallup Tribe's antidegradation policies if the discharge point is located within 1 linear mile upstream of waters designated by the Tribe.

iii. Each permittee shall submit a copy of the Notice of Intent (NOI) to be covered by the general permit to the Puyallup Tribal Natural Resources Department at the address listed below at the same time it is submitted to EPA.

Puyallup Tribe of Indians
3009 E. Portland Avenue
Tacoma, WA 98404
ATTN: Natural Resources Department

iv. All supporting documentation and certifications in the NOI related to coverage under the general permit for Endangered Species Act purposes shall be submitted to the Puyallup Tribal Natural Resources Department for review.

v. If EPA requires coverage under an individual or alternative permit, the permittee shall submit a copy of the permit to the Puyallup Tribal Natural Resources Department at the address listed above.

vi. The permittee shall submit all stormwater pollution prevention plans to the Puyallup Tribal Natural Resources Department for review and approval prior to beginning any activities resulting in a discharge to tribal waters.

Appendix A - Definitions and Acronyms

Definitions

"Arid Areas" means areas with an average annual rainfall of 0 to 10 inches.

"Best Management Practices" (BMPs) means schedules of activities, prohibitions of practices, maintenance procedures, and other management practices to prevent or reduce the discharge of pollutants to waters of the United States. BMPs also include treatment requirements, operating procedures, and practice to control plant site runoff, spillage or leaks, sludge or waste disposal, or drainage from raw material storage.

"Commencement of Construction Activities" means the initial disturbance of soils associated with clearing, grading, or excavating activities or other construction-related activities (e.g., stockpiling of fill material).

"Control Measure" as used in this permit, refers to any BMP or other method used to prevent or reduce the discharge of pollutants to waters of the United States.

"CWA" means the Clean Water Act or the Federal Water Pollution Control Act, 33 U.S.C. section 1251 et seq.

"Discharge" when used without qualification means the "discharge of a pollutant."

"Discharge of Stormwater Associated with Construction Activity" as used in this permit, refers to a discharge of pollutants in stormwater from areas where soil disturbing activities (e.g., clearing, grading, or excavation), construction materials or equipment storage or maintenance (e.g., fill piles, borrow area, concrete truck chute washdown, fueling), or other industrial stormwater directly related to the construction process (e.g., concrete or asphalt batch plants) are located.

"Eligible" means qualified for authorization to discharge stormwater under this general permit.

"Facility" or "Activity" means any "point source" or any other facility or activity (including land or appurtenances thereto) that is subject to regulation under the NPDES program.

"Federal Facility" means any buildings, installations, structures, land, public works, equipment, aircraft, vessels, and other vehicles and property, owned by, or constructed or manufactured for the purpose of leasing to, the Federal government.

"Final Stabilization" means that:

1. All soil disturbing activities at the site have been completed and either of the two following criteria are met:
    a. a uniform (e.g,, evenly distributed, without large bare areas) perennial vegetative cover with a density of 70 percent of the native background

vegetative cover for the area has been established on all unpaved areas and areas not covered by permanent structures, or

b. equivalent permanent stabilization measures (such as the use of riprap, gabions, or geotextiles) have been employed.

2. When background native vegetation will cover less than 100 percent of the ground (e.g., arid areas, beaches), the 70 percent coverage criteria is adjusted as follows: if the native vegetation covers 50 percent of the ground, 70 percent of 50 percent (0.70 X 0.50 = 0.35) would require 35 percent total cover for final stabilization. On a beach with no natural vegetation, no stabilization is required.
3. In arid and semi-arid areas only, all soil disturbing activities at the site have been completed and both of the following criteria have been met:
   a. Temporary erosion control measures (e.g., degradable rolled erosion control product) are selected, designed, and installed along with an appropriate seed base to provide erosion control for at least three years without active maintenance by you,
   b. The temporary erosion control measures are selected, designed, and installed to achieve 70 percent vegetative coverage within three years.
4. For individual lots in residential construction, final stabilization means that either:
   a. The homebuilder has completed final stabilization as specified above, or
   b. The homebuilder has established temporary stabilization including perimeter controls for an individual lot prior to occupation of the home by the homeowner and informing the homeowner of the need for, and benefits of, final stabilization.
5. For construction projects on land used for agricultural purposes (e.g., pipelines across crop or range land, staging areas for highway construction, etc.), final stabilization may be accomplished by returning the disturbed land to its preconstruction agricultural use. Areas disturbed that were not previously used for agricultural activities, such as buffer strips immediately adjacent to ‘‘water of the United States,’’ and areas which are not being returned to their preconstruction agricultural use must meet the final stabilization criteria (1) or (2) or (3) above.

“Indian country” is defined at 40 CFR §122.2 to mean:

1. All land within the limits of any Indian reservation under the jurisdiction of the United States Government, notwithstanding the issuance of any patent, and, including rights-of-way running through the reservation;
2. All dependent Indian communities with the borders of the United States whether within the originally or subsequently acquired territory thereof, and whether within or without the limits of a state; and
3. All Indian allotments, the Indian titles to which have not been extinguished, including rights-of-ways running through the same.

“Large Construction Activity” is defined at 40 CFR §122.26(b)(14)(x) and incorporated here by reference. A large construction activity includes clearing, grading, and excavating resulting in a land disturbance that will disturb equal to or greater than five acres of land or will disturb less than five acres of total land area but is part of a larger common plan of development or sale that will ultimately disturb equal to or greater than five acres. Large

construction activity does not include routine maintenance that is performed to maintain the original line and grade, hydraulic capacity, or original purpose of the site.

"Municipal Separate Storm Sewer System" or "MS4" is defined at 40 CFR §122.26(b)(8) to mean a conveyance or system of conveyances (including roads with drainage systems, municipal streets, catch basins, curbs, gutters, ditches, manmade channels, or storm drains):

1. Owned and operated by a state, city, town, borough, county, parish, district, association, or other public body (created by or pursuant to State law) having jurisdiction over disposal of sewage, industrial wastes, stormwater, or other wastes, including special districts under State law such as a sewer district, flood control district or drainage district, or similar entity, or an Indian tribe or an authorized Indian tribal organization, or a designated and approved management agency under section 208 of the CWA that discharges to waters of the United States;
2. Designed or used for collecting or conveying stormwater;
3. Which is not a combined sewer; and
4. Which is not part of a Publicly Owned Treatment Works (POTW) as defined at 40 CFR §122.2.

"New Project" means the "commencement of construction activities" occurs after the effective date of this permit.

"Ongoing Project" means the "commencement of construction activities" occurs before the effective date of this permit.

"Operator" for the purpose of this permit and in the context of stormwater associated with construction activity, means any party associated with a construction project that meets either of the following two criteria:

1. The party has operational control over construction plans and specifications, including the ability to make modifications to those plans and specifications; or
2. The party has day-to-day operational control of those activities at a project which are necessary to ensure compliance with a SWPPP for the site or other permit conditions (e.g., they are authorized to direct workers at a site to carry out activities required by the SWPPP or comply with other permit conditions). This definition is provided to inform permittees of EPA's interpretation of how the regulatory definitions of "owner or operator" and "facility or activity" are applied to discharges of stormwater associated with construction activity.

"Owner or operator" means the owner or operator of any ''facility or activity'' subject to regulation under the NPDES program.

"Permitting Authority" means the United States Environmental Protection Agency, EPA, a Regional Administrator of the Environmental Protection Agency or an authorized representative.

"Point Source" means any discernible, confined, and discrete conveyance, including but not limited to, any pipe, ditch, channel, tunnel, conduit, well, discrete fissure, container, rolling stock concentrated animal feeding operation, landfill leachate collection system, vessel or other floating craft from which pollutants are or may be discharged. This term does not include return flows from irrigated agriculture or agricultural stormwater runoff.

"Pollutant" is defined at 40 CFR §122.2. A partial listing from this definition includes: dredged spoil, solid waste, sewage, garbage, sewage sludge, chemical wastes, biological materials, heat, wrecked or discarded equipment, rock, sand, cellar dirt, and industrial or municipal waste.

"Project Area" means:
− The areas on the construction site where stormwater discharges originate and flow toward the point of discharge into the receiving waters (including areas where excavation, site development, or other ground disturbance activities occur) and the immediate vicinity. (Example: 1. Where bald eagles nest in a tree that is on or bordering a construction site and could be disturbed by the construction activity or where grading causes stormwater to flow into a small wetland or other habitat that is on the site that contains listed species.)
− The areas where stormwater discharges flow from the construction site to the point of discharge into receiving waters. (Example: Where stormwater flows into a ditch, swale, or gully that leads to receiving waters and where listed species (such as amphibians) are found in the ditch, swale, or gully.)
− The areas where stormwater from construction activities discharge into receiving waters and the areas in the immediate vicinity of the point of discharge. (Example: Where stormwater from construction activities discharges into a stream segment that is known to harbor listed aquatic species.)
− The areas where stormwater BMPs will be constructed and operated, including any areas where stormwater flows to and from BMPs. (Example: Where a stormwater retention pond would be built.)
− The areas upstream and /or downstream from construction activities discharges into a stream segment that may be affected by the said discharges. (Example: Where sediment discharged to a receiving stream settles downstream and impacts a breeding area of a listed aquatic species.)

"Receiving water" means the "Water of the United States" as defined in 40 CFR §122.2 into which the regulated stormwater discharges.

"Runoff coefficient" means the fraction of total rainfall that will appear at the conveyance as runoff.

"Semi-Arid Areas" means areas with an average annual rainfall of 10 to 20 inches.

"Site" means the land or water area where any "facility or activity" is physically located or conducted, including adjacent land used in connection with the facility or activity.

"Small Construction Activity" is defined at 40 CFR §122.26(b)(15) and incorporated here by reference. A small construction activity includes clearing, grading, and excavating resulting in a land disturbance that will disturb equal to or greater than one (1) acre and less than five (5) acres of land or will disturb less than one (1) acre of total land area but is part of a larger common plan of development or sale that will ultimately disturb equal to or greater than one (1) acre and less than five (5) acres. Small construction activity does not include routine maintenance that is performed to maintain the original line and grade, hydraulic capacity, or original purpose of the site.

"Stormwater" means stormwater runoff, snow melt runoff, and surface runoff and drainage.

"Stormwater Discharge-Related Activities" as used in this permit, include: activities that cause, contribute to, or result in stormwater point source pollutant discharges, including but not limited to: excavation, site development, grading and other surface disturbance activities; and measures to control stormwater including the siting, construction and operation of BMPs to control, reduce or prevent stormwater pollution.

"Total Maximum Daily Load" or "TMDL" means the sum of the individual wasteload allocations (WLAs) for point sources and load allocations (LAs) for nonpoint sources and natural background. If a receiving water has only one point source discharger, the TMDL is the sum of that point source WLA plus the LAs for any nonpoint sources of pollution and natural background sources, tributaries, or adjacent segments. TMDLs can be expressed in terms of either mass per time, toxicity, or other appropriate measure.

"Waters of the United States" is as defined at 40 CFR §122.2.

"Wetland" means those areas that are inundated or saturated by surface or groundwater at a frequency and duration sufficient to support, and that under normal circumstances do support, a prevalence of vegetation typically adapted for life in saturated soil conditions. Wetlands generally include swamps, marshes, bogs, and similar areas.

ACRONYMS

BMP - Best Management Practices
CGP - Construction General Permit
CFR - Code of Federal Regulations
CWA - Clean Water Act
EPA - United States Environmental Protection Agency
ESA - Endangered Species Act
FWS - United States Fish and Wildlife Service
MS4 - Municipal Separate Storm Sewer System
MSGP - Multi-Sector General Permit
NHPA - National Historic Preservation Act
NMFS - United States National Marine Fisheries Service
NOI - Notice of Intent

NOT - Notice of Termination
NPDES - National Pollutant Discharge Elimination System
POTW - Publicly Owned Treatment Works
SHPO - State Historic Preservation Officer
SWPPP - Stormwater Pollution Prevention Plan
THPO - Tribal Historic Preservation Officer
TMDL - Total Maximum Daily Load
WQS - Water Quality Standard

Appendix B - Permit Areas Eligible for Coverage

Permit coverage for stormwater discharges from construction activity occurring within the following areas is provided by legally separate and distinctly numbered permits:

1. EPA Region 1: CT, MA, ME, NH, RI, VT

US EPA, Region 01
Office of Ecosystem Protection
NPDES Stormwater Program
1 Congress St, Suite 1100 (CMU)
Boston, MA 02114-2023

The States of Connecticut, Maine, Rhode Island, and Vermont are the NPDES Permitting Authority for the majority of discharges within their respective states.

Permit No.	Areas of Coverage/Where EPA is Permitting Authority
MAR100000	Commonwealth of Massachusetts (except Indian country)
MAR10000I	Indian country within the State of Massachusetts
CTR10000I	Indian country within the State of Connecticut
NHR100000	State of New Hampshire **[coverage not yet available]**
RIR10000I	Indian country within the State of Rhode Island
VTR10000F	Federal Facilities in the State of Vermont

2. EPA Region 2: NJ, NY, PR, VI

For NJ, NY, and VI:
US EPA, Region 02
NPDES Stormwater Program
290 Broadway, 24th Floor
New York, NY 10007-1866

For PR:
US EPA, Region 02
Caribbean Environmental Protection Division
NPDES Stormwater Program
1492 Ponce de Leon Ave
Central Europa Building, Suite 417
San Juan, PR 00907-4127

The State of New York is the NPDES Permitting Authority for the majority of discharges within its state. The State of New Jersey and the Virgin Islands are the NPDES Permitting Authority for all discharges within their respective states.

Permit No.	Areas of Coverage/Where EPA is Permitting Authority
NYR10000I	Indian country within the State of New York **[coverage not yet available]**
PRR100000	The Commonwealth of Puerto Rico **[coverage not yet available]**

3. EPA Region 3: DE, DC, MD, PA, VA, WV

US EPA, Region 03
NPDES Stormwater Program
1650 Arch St
Philadelphia, PA 19103

The State of Delaware is the NPDES Permitting Authority for the majority of discharges within its state. Maryland, Pennsylvania, Virginia, and West Virginia are the NPDES Permitting Authority for all discharges within their respective states.

Permit No.	Areas of Coverage/Where EPA is Permitting Authority
DCR100000	The District of Columbia
DER10000F	Federal Facilities in the State of Delaware

4. EPA Region 4: AL, FL, GA, KY, MS, NC, SC, TN

US EPA, Region 04
Water Management Division
NPDES Stormwater Program
61 Forsyth St SW
Atlanta, GA 30303-3104

Coverage Not Available. Construction activities in Region 4 must obtain permit coverage under an alternative permit.

5. EPA Region 5: IL, IN, MI, MN, OH, WI

US EPA, Region 05
NPDES & Technical Support
NPDES Stormwater Program
77 W Jackson Blvd
(WN-16J)
Chicago, IL 60604-3507

The States of Michigan, Minnesota, and Wisconsin are the NPDES Permitting Authority for the majority of discharges within their respective states. The States of Illinois, Indiana, and Ohio are the NPDES Permitting Authorities for all discharges within their respective states.

Permit No.	Areas of coverage/where EPA is Permitting Authority
MIR10000I	Indian country within the State of Michigan **[coverage not yet available]**
MNR10000I	Indian country within the State of Minnesota **[coverage not yet available]**
WIR10000I	Indian country within the State of Wisconsin, except the Sokaogon Chippewa (Mole Lake) Community. **[coverage not yet available]**

6. EPA Region 6: AR, LA, OK, TX, NM (except see Region 9 for Navajo lands, and see Region 8 for Ute Mountain Reservation lands)

US EPA, Region 06
NPDES Stormwater Program
1445 Ross Ave, Suite 1200
Dallas, TX 75202-2733

The States of Louisiana, Oklahoma, and Texas are the NPDES Permitting Authority for the majority of discharges within their respective state. The State of Arkansas is the NPDES Permitting Authority for all discharges within its respective state.

Permit No.	Areas of coverage/where EPA is Permitting Authority
LAR10000I	Indian country within the State of Louisiana
NMR100000	The State of New Mexico, except Indian country
NMR10000I	Indian country within the State of New Mexico, except Navajo Reservation Lands that are covered under Arizona permit AZR10000I and Ute Mountain Reservation Lands that are covered under Colorado permit COR10000I. **[coverage not yet available]**
OKR10000I	Indian country within the State of Oklahoma **[coverage not yet available]**
OKR10000F	Discharges in the State of Oklahoma that are not under the authority of the Oklahoma Department of Environmental Quality, including activities associated with oil and gas exploration, drilling, operations, and pipelines (includes SIC Groups 13 and 46, and SIC codes 492 and 5171), and point source discharges associated with agricultural production, services, and silviculture (includes SIC Groups 01, 02, 07, 08, 09). **[coverage not yet available]**
TXR10000F	Discharges in the State of Texas that are not under the authority of the Texas Commission on Environmental Quality (formerly TNRCC), including activities associated with the exploration, development, or production of oil or gas or geothermal resources, including transportation of crude oil or natural gas by pipeline. **[coverage not yet available]**
TXR10000I	Indian country within the State of Texas.

7. EPA Region 7: IA, KS, MO, NE (except see Region 8 for Pine Ridge Reservation Lands)

US EPA, Region 07
NPDES Stormwater Program
901 N 5th St
Kansas City, KS 66101

The States of Iowa, Kansas, and Nebraska are the NPDES Permitting Authority for the majority of discharges within their respective states. The State of Missouri is the NPDES Permitting Authority for all discharges within its state.

Permit No.	Areas of coverage/where EPA is Permitting Authority
IAR10000I	Indian country within the State of Iowa
KSR10000I	Indian country within the State of Kansas
NER10000I	Indian country within the State of Nebraska, except Pine Ridge Reservation lands (see Region 8)

8. EPA Region 8: CO, MT, ND, SD, WY, UT (except see Region 9 for Goshute Reservation and Navajo Reservation Lands), the Ute Mountain Reservation in NM, and the Pine Ridge Reservation in NE.

US EPA, Region 08
NPDES Stormwater Program
999 18th St, Suite 300
(EPR-EP)
Denver, CO 80202-2466

The States of Colorado, Montana, North Dakota, South Dakota, Utah, and Wyoming are the NPDES Permitting Authority for the majority of discharges within their respective states.

Permit No.	Areas of coverage/where EPA is Permitting Authority
COR10000F	Federal Facilities in the State of Colorado, except those located on Indian country **[coverage not yet available]**
COR10000I	Indian country within the State of Colorado, as well as the portion of the Ute Mountain Reservation located in New Mexico **[coverage not yet available]**
MTR10000I	Indian country within the State of Montana **[coverage not yet available]**
NDR10000I	Indian country within the State of North Dakota, as well as that portion of the Standing Rock Reservation located in South Dakota (except for the portion of the lands within the former boundaries of the Lake Traverse Reservation which is covered under South Dakota permit SDR10000I listed below)

SDR10000I	Indian country within the State of South Dakota, as well as the portion of the Pine Ridge Reservation located in Nebraska and the portion of the lands within the former boundaries of the Lake Traverse Reservation located in North Dakota (except for the Standing Rock Reservation which is covered under North Dakota permit NDR10000I listed above)
UTR10000I	Indian country within the State of Utah, except Goshute and Navajo Reservation lands (see Region 9)
WYR10000I	Indian country within the State of Wyoming

9. EPA Region 9: CA, HI, NV, Guam, American Samoa, the Commonwealth of the Northern Mariana Islands, the Goshute Reservation in UT and NV, the Navajo Reservation in UT, NM, and AZ, the Duck Valley Reservation in ID, and the Fort McDermitt Reservation in OR.

US EPA, Region 09
NPDES Stormwater Program
75 Hawthorne St
San Francisco, CA 94105-3901

The States of Arizona, California and Nevada are the NPDES Permitting Authority for the majority of discharges within their respective states. The State of Hawaii is the NPDES Permitting Authority for all discharges within its state.

Permit No.	Areas of coverage/where EPA is Permitting Authority
ASR100000	The Island of American Samoa
AZR10000I	Indian country within the State of Arizona, as well as Navajo Reservation lands in New Mexico and Utah
CAR10000I	Indian country within the State of California
GUR100000	The Island of Guam
JAR100000	Johnston Atoll
MWR100000	Midway Island and Wake Island
MPR100000	Commonwealth of the Northern Mariana Islands
NVR10000I	Indian country within the State of Nevada, as well as the Duck Valley Reservation in Idaho, the Fort McDermitt Reservation in Oregon and the Goshute Reservation in Utah

10. EPA Region 10: AK, WA, ID (except see Region 9 for Duck Valley Reservation Lands), and OR (except see Region 9 for Fort McDermitt Reservation).

US EPA, Region 10
NPDES Stormwater Program
1200 6th Ave (OW-130)
Seattle, WA 98101-1128
Phone: (206) 553-6650

The States of Oregon and Washington are the NPDES Permitting Authority for the majority of discharges within their respective states.

Permit No.	Areas of coverage/where EPA is Permitting Authority
AKR100000	The State of Alaska, except Indian country
AKR10000I	Indian country within the state of Alaska
IDR100000	The State of Idaho, except Indian country
IDR10000I	Indian country within the State of Idaho, except Duck Valley Reservation lands (see Region 9)
ORR10000I	Indian country within the State of Oregon, except Fort McDermitt Reservation lands (see Region 9)
WAR10000F	Federal Facilities in the State of Washington, except those located on Indian country
WAR10000I	Indian country within the State of Washington

Appendix C - Endangered Species Act Review Procedures

You must meet at least one of the six criteria in Part 1.3.C.6 to be eligible for coverage under this permit. You must follow the procedures in this Appendix to assess the potential effects of stormwater discharges and stormwater discharge-related activities on listed species and their critical habitat. When evaluating these potential effects, operators must evaluate the entire project area.

For purposes of this Appendix, the term "project area" is inclusive of the term "Action Area." Action area is defined in 50 CFR §402.02 as all areas to be affected directly or indirectly by the federal action and not merely the immediate area involved in the action.

This includes areas beyond the footprint of the construction area that may be affected by stormwater discharges and stormwater discharge related activities. "Project area" is defined in Appendix A.

(Operators who are eligible and able to certify eligibility under Criterion B, C, D, or F of Part 1.3.C.6 because of a previously issued ESA section 10 permit, a previously completed ESA section 7 consultation, or because the operator's activities were already addressed in another operator's certification of eligibility may proceed directly to Step Four.)

Step One: Determine if Listed Threatened or Endangered Species are Present On or Near Your Project Area

You must determine, to the best of your knowledge, whether listed species are located on or near your project area. To make this determination, you should:

- Determine if listed species are in your county or township. The local offices of the U.S. Fish and Wildlife Service (FWS), National Marine Fisheries Service (NMFS), and State or Tribal Heritage Centers often maintain lists of federally listed endangered or threatened species on their internet sites. Visit http://www.epa.gov/npdes/stormwater/cgp to find the appropriate site for your state or check with your local office. In most cases, these lists allow you to determine if there are listed species in your county or township.
- If there are listed species in your county or township, check to see if critical habitat has been designated and if that area overlaps or is near your project area.
- Contact your local FWS, NMFS, or State or Tribal Heritage Center to determine if the listed species could be found on or near your project area and if any critical habitat areas have been designated that overlap or are near your project area. Critical habitat areas maybe designated independently from the listed species for your county, so even if there are no listed species in your county or township, you must still contact one of the agencies mentioned above to determine if there are any critical habitat areas on or near your project area.

You can also find critical habitat designations and associated requirements at 50 CFR Parts 17 and 226. http://www.access.gpo.gov.

- If there are no listed species in your county or township, no critical habitat areas on or near your project area, or if your local FWS, NMFS, or State or Tribal Heritage Center indicates that listed species are not a concern in your part of the county or township, you may check box A on the Notice of Intent Form.
- If there are listed species and if your local FWS, NMFS, or State or Tribal Heritage Center indicates that these species could exist on or near your project area, you will need to do one or more of the following:
  - Conduct visual inspections: This method may be particularly suitable for construction sites that are smaller in size or located in non-natural settings such as highly urbanized areas or industrial parks where there is little or no natural habitat, or for construction activities that discharge directly into municipal stormwater collection systems.
  - Conduct a formal biological survey. In some cases, particularly for larger construction sites with extensive stormwater discharges, biological surveys may be an appropriate way to assess whether species are located on or near the project area and whether there are likely adverse effects to such species. Biological surveys are frequently performed by environmental consulting firms. A biological survey may in some cases be useful in conjunction with Steps Two, Three, or Four of these instructions.
  - Conduct an environmental assessment under the National Environmental Policy Act (NEPA). Such reviews may indicate if listed species are in proximity to the project area. Coverage under the CGP does not trigger such a review because the CGP does not regulate new sources (that is, dischargers subject to New Source Performance Standards under section 306 of the Clean Water Act), and is thus statutorily exempted from NEPA. See CWA section 511(c). However, some construction activities might require review under NEPA for other reasons such as federal funding or other federal involvement in the project.
  - If listed threatened or endangered species or critical habitat are present in the project area, you must look at impacts to species and/or habitat when following Steps Two through Four. Note that many but not all measures imposed to protect listed species under these steps will also protect critical habitat. Thus, meeting the eligibility requirements of this CGP may require measures to protect critical habitat that are separate from those to protect listed species.

Step Two: Determine if the Construction Activity's Stormwater Discharges or Stormwater Discharge- Related Activities Are Likely to Adversely Affect Listed Threatened or Endangered Species or Designated Critical Habitat

To receive CGP coverage, you must assess whether your stormwater discharges or stormwater discharge related activities is likely to adversely affect listed threatened or endangered species or designated critical habitat that are present on or near your project area.

Potential adverse effects from stormwater discharges and stormwater discharge-related activities include:

- *Hydrological.* Stormwater discharges may cause siltation, sedimentation or induce other changes in receiving waters such as temperature, salinity or pH. These effects will vary with the amount of stormwater discharged and the volume and condition of the receiving water. Where a stormwater discharge constitutes a minute portion of the total volume of the receiving water, adverse hydrological effects are less likely. Construction activity itself may also alter drainage patterns on a site where construction occurs that can impact listed species or critical habitat.
- *Habitat.* Excavation, site development, grading, and other surface disturbance activities from construction activities, including the installation or placement of stormwater BMPs, may adversely affect listed species or their habitat. Stormwater may drain or inundate listed species habitat.
- *Toxicity.* In some cases, pollutants in stormwater may have toxic effects on listed species.

The scope of effects to consider will vary with each site. If you are having difficulty determining whether your project is likely to adversely affect listed species or critical habitat, or one of the Services has already raised concerns to you, you must contact the appropriate office of the FWS, NMFS or Natural Heritage Center for assistance. If adverse effects are not likely, then you may check box E on the NOI form and apply for coverage under the CGP. If the discharge may adversely effect listed species or critical habitat, you must follow Step Three.

Step Three: Determine if Measures Can Be Implemented to Avoid Adverse Effects
If you make a preliminary determination that adverse effects are likely to occur, you can still receive coverage under Criterion E of Part 1.3.C.6 of the CGP if appropriate measures are undertaken to avoid or eliminate the likelihood of adverse effects prior to applying for CGP coverage. These measures may involve relatively simple changes to construction activities such as re-routing a stormwater discharge to bypass an area where species are located, relocating BMPs, or by changing the "footprint" of the construction activity. You should contact the FWS and/or NMFS to see what appropriate measures might be suitable to avoid or eliminate the likelihood of adverse impacts to listed species and/or critical habitat. (See 50 CFR §402.13(b)). This can entail the initiation of informal consultation with the FWS and/or NMFS (described in more detail in Step Four).

If you adopt measures to avoid or eliminate adverse affects, you must continue to abide by those measures for the duration of the construction project and coverage under the CGP. These measures must be described in the SWPPP and are enforceable CGP conditions and/or conditions for meeting the eligibility criteria in Part 1.3. If appropriate measures to avoid the likelihood of adverse effects are not available, you must follow Step Four.

Step Four: Determine if the Eligibility Requirements of Criterion B, C, D, or F of Part 1.3.C.6 Can Be Met
Where adverse effects are likely, you must contact the FWS and/or NMFS. You may still be eligible for CGP coverage if any likely adverse effects can be addressed through meeting Criterion B, C, D, or F of Part 1.3.C.6 of the CGP. These criteria are as follows:

1. *An ESA Section 7 Consultation Is Performed for Your Activity (See Criterion B or C of Part 1.3.C.6 of the CGP).*

Formal or informal ESA section 7 consultation is performed with the FWS and/or NMFS that addresses the effects of your stormwater discharges and stormwater discharge-related activities on federally-listed and threatened species and designated critical habitat. FWS and/or NMFS may request that consultation take place if any actions are identified that may affect listed species or critical habitat. In order to be eligible for coverage under this permit, consultation must result in a "no jeopardy opinion" or a written concurrence by the Service(s) on a finding that your stormwater discharge(s) and stormwater discharge-related activities are not likely to adversely affect listed species or critical habitat (For more information on consultation, see 50 CFR §402). If you receive a "jeopardy opinion," you may continue to work with the FWS and/or NMFS and your permitting authority to modify your project so that it will not jeopardize listed species or designated critical habitat.

Most consultations are accomplished through informal consultation. By the terms of this CGP, EPA has automatically designated operators as non-federal representatives for the purpose of conducting informal consultations. See Part 1.3.C.6 and 50 CFR §402.08 and §402.13. When conducting informal ESA section 7 consultation as a non-federal representative, you must follow the procedures found in 50 CFR Part 402 of the ESA regulations. You must notify FWS and/or NMFS of your intention and agreement to conduct consultation as a non-federal representative.

Consultation may occur in the context of another federal action at the construction site (e.g., where ESA section 7 consultation was performed for issuance of a wetlands dredge and fill permit for the project or where a NEPA review is performed for the project that incorporates a section 7 consultation). Any terms and conditions developed through consultations to protect listed species and critical habitat must be incorporated into the SWPPP. As noted above, operators may, if they wish, initiate consultation with the Services at Step Four.

Whether ESA section 7 consultation must be performed with either the FWS, NMFS or both Services depends on the listed species that may be affected by the operator's activity. In general, NMFS has jurisdiction over marine, estuaries, and anadromous species. Operators should also be aware that while formal section 7 consultation provides protection from incidental takings liability, informal consultation does not.

2. *An Incidental Taking Permit Under Section 10 of the ESA is Issued for the Operators Activity (See Criterion D of Part 1.3.C.6 of the CGP).*

Your construction activities are authorized through the issuance of a permit under section 10 of the ESA and that authorization addresses the effects of your stormwater discharge(s) and stormwater discharge-related activities on federally-listed species and designated critical habitat. You must follow FWS and/or NMFS procedures when applying for an ESA Section 10 permit (see 50 CFR §17.22(b)(1) for FWS and §222.22

for NMFS). Application instructions for section 10 permits for FWS and NMFS can be obtained by accessing the FWS and NMFS websites (http://www.fws.gov and http://www.nmfs.noaa.gov) or by contacting the appropriate FWS and NMFS regional office.

3. *You are Covered Under the Eligibility Certification of Another Operator for the Project Area (See Criterion F of Part 1.3.C.6 of the CGP).*

Your stormwater discharges and stormwater discharge-related activities were already addressed in another operator's certification of eligibility under Criteria A through E of Part 1.3.C.6 which also included your project area. For example, a general contractor or developer may have completed and filed an NOI for the entire project area with the necessary Endangered Species Act certifications (criteria A-E), subcontractors may then rely upon that certification and must comply with any conditions resulting from that process. By certifying eligibility under Criterion F of Part 1.3.C.6, you agree to comply with any measures or controls upon which the other operator's certification under Criterion B, C, or D of Part 1.3.C.6 was based. Certification under Criterion F of Part 1.3.C.6 is discussed in more detail in the Fact Sheet that accompanies this permit.

You must comply with any terms and conditions imposed under the eligibility requirements of Criterion A through F to ensure that your stormwater discharges and stormwater discharge-related activities are protective of listed species and/or critical habitat. Such terms and conditions must be incorporated in the project's SWPPP. If the eligibility requirements of Part 1.3.C.6 cannot be met, then you are not eligible for coverage under the CGP. In these instances, you may consider applying to EPA for an individual permit.

Appendix D - Small Construction Waivers and Instructions

These waivers are only available to stormwater discharges associated with small construction activities (i.e., 1-5 acres). As the operator of a small construction activity, you may be able to qualify for a waiver in lieu of needing to obtain coverage under this general permit based on: (A) a low rainfall erosivity factor, (B) a TMDL analysis, or (C) an equivalent analysis that determines allocations for small construction sites are not needed. Each operator, otherwise needing permit coverage, must notify EPA of its intention for a waiver. It is the responsibility of those individuals wishing to obtain a waiver from coverage under this general permit to submit a complete and accurate waiver certification as described below. Where the operator changes or another is added during the construction project, the new operator must also submit a waiver certification to be waived.

A. Rainfall Erosivity Waiver

Under this scenario the small construction project's rainfall erosivity factor calculation ("R" in the Revised Universal Soil Loss Equation) is less than 5 during the period of construction activity. The operator must certify to the EPA that construction activity will occur only when the rainfall erosivity factor is less than 5. The period of construction activity begins at initial earth disturbance and ends with final stabilization. Where vegetation will be used for final stabilization, the date of installation of a stabilization practice that will provide interim non-vegetative stabilization can be used for the end of the construction period, provided the operator commits (as a condition of waiver eligibility) to periodically inspect and properly maintain the area until the criteria for final stabilization as defined in the construction general permit have been met. If use of this interim stabilization eligibility condition was relied on to qualify for the waiver, signature on the waiver with its certification statement constitutes acceptance of and commitment to complete the final stabilization process. The operator must submit a waiver certification to EPA prior to commencing construction activities.

Note: The rainfall erosivity factor "R" is determined in accordance with Chapter 2 of Agriculture Handbook Number 703, Predicting Soil Erosion by Water: A Guide to Conservation Planning With the Revised Universal Soil Loss Equation (RUSLE), pages 21–64, dated January 1997; United States Department of Agriculture (USDA), Agricultural Research Service.

EPA has developed an online rainfall erosivity calculator to help small construction sites determine potential eligibility for the rainfall erosivity waiver.You can access the calculator from EPA's website at: www.epa.gov/npdes/stormwater/lew. The R factor can easily be calculated by using the construction site latitude/longitude or address and estimated start and end dates of construction. This calculator may also be useful in determining the time periods during which construction activity could be waived from permit coverage. You may find that moving your construction activity by a few weeks or expediting site stabilization will allow you to qualify for the waiver. Use this online calculator or the Construction Rainfall Erosivity Waiver Fact Sheet

(www.epa.gov/npdes/pubs/fact3-1.pdf) to assist in determining the R Factor for your small construction site.

If you are the operator of the construction activity and eligible for a waiver based on low erosivity potential, you may submit a rainfall erosivity waiver electronically via EPA's eNOI system (www.epa.gov/npdes/eNOI) or provide the following information on the waiver certification form in order to be waived from permitting requirements:

1. Name, address and telephone number of the construction site operators;
2. Name (or other identifier), address, county or similar governmental subdivision, and latitude/longitude of the construction project or site;
3. Estimated construction start and completion (i.e., final stabilization) dates, and total acreage (to the nearest quarter acre) to be disturbed;
4. The rainfall erosivity factor calculation that applies to the active construction phase at your project site; and
5. A statement, signed and dated by an authorized representative as provided in Appendix G, Subsection 11, that certifies that the construction activity will take place during a period when the value of the rainfall erosivity factor is less than five.

You can access the waiver certification form from EPA's website at: (http://www.epa.gov/npdes/pubs/construction_waiver_form.pdf). Paper copies of the form must be sent to one of the addresses listed in Part D of this section.

Note: If the R factor is 5 or greater, you cannot apply for the rainfall erosivity waiver, and must apply for permit coverage as per Subpart 2.1 of the construction general permit, unless you qualify for the Water Quality Waiver as described below.

If your small construction project continues beyond the projected completion date given on the waiver certification, you must recalculate the rainfall erosivity factor for the new project duration. If the R factor is below five (5), you must update all applicable information on the waiver certification and retain a copy of the revised waiver as part of the site SWPPP. The new waiver certification must be submitted prior to the projected completion date listed on the original waiver form to assure your exemption from permitting requirements is uninterrupted. If the new R factor is five (5) or above, you must submit an NOI as per Part 2.

B. TMDL Waiver

This waiver is available if EPA has established or approved a TMDL that addresses the pollutant(s) of concern and has determined that controls on stormwater discharges from small construction activity are not needed to protect water quality. The pollutant(s) of concern include sediment (such as total suspended solids, turbidity or siltation) and any other pollutant that has been identified as a cause of impairment of any water body that will receive a discharge from the construction activity. Information on TMDLs that have been established or approved by EPA is available from EPA online at http://www.epa.gov/owow/tmdl/ and from state and tribal water quality agencies.

If you are the operator of the construction activity and eligible for a waiver based on compliance with an EPA established or approved TMDL, you must provide the following information on the Waiver Certification form in order to be waived from permitting requirements:

1. Name, address and telephone number of the construction site operator(s);
2. Name (or other identifier), address, county or similar governmental subdivision, and latitude/longitude of the construction project or site;
3. Estimated construction start and completion (i.e., final stabilization) dates, and total acreage (to the nearest quarter acre) to be disturbed;
4. The name of the water body(s) that would be receiving stormwater discharges from your construction project;
5. The name and approval date of the TMDL;
6. A statement, signed and dated by an authorized representative as provided in Appendix G, Subsection 11, that certifies that the construction activity will take place and that the stormwater discharges will occur, within the drainage area addressed by the TMDL.

C. Equivalent Analysis Waiver

This waiver is available for non-impaired waters only. The operator can develop an equivalent analysis that determines allocations for his small construction site for the pollutant(s) of concern or determines that such allocations are not needed to protect water quality. This waiver requires a small construction operator to develop an equivalent analysis based on existing in-stream concentrations, expected growth in pollutant concentrations from all sources, and a margin of safety.

If you are a construction operator who wants to use this waiver, you must develop your equivalent analysis and provide the following information to be waived from permitting requirements:

1. Name, address and telephone number of the construction site operator(s);
2. Name (or other identifier), address, county or similar governmental subdivision, and latitude/longitude of the construction project or site;
3. Estimated construction start and completion (i.e., final stabilization) dates, and total acreage (to the nearest quarter acre) to be disturbed;
4. The name of the water bodies that would be receiving stormwater discharges from your construction project;
5. Your equivalent analysis;
6. A statement, signed and dated by an authorized representative as provided in Appendix G, Subsection 11, that certifies that the construction activity will take place and that the stormwater discharges will occur, within the drainage area addressed by the equivalent analysis.

D. Waiver Deadlines and Submissions

1. Waiver certifications must be submitted prior to commencement of construction activities.
2. If you submit a TMDL or equivalent analysis waiver request, you are not waived until EPA approves your request. As such, you may not commence construction activities until receipt of approval from EPA.
3. Late Notifications: Operators are not prohibited from submitting waiver certifications after initiating clearing, grading, excavation activities, or other construction activities. The Agency reserves the right to take enforcement for any unpermitted discharges that occur between the time construction commenced and waiver authorization is granted.

Submittal of a waiver certification is an optional alternative to obtaining permit coverage for discharges of stormwater associated with small construction activity, provided you qualify for the waiver. Any discharge of stormwater associated with small construction activity not covered by either a permit or a waiver may be considered an unpermitted discharge under the Clean Water Act. As mentioned above, EPA reserves the right to take enforcement for any unpermitted discharges that occur between the time construction commenced and either discharge authorization is granted or a complete and accurate waiver certification is submitted. EPA may notify any operator covered by a waiver that they must apply for a permit. EPA may notify any operator who has been in non-compliance with a waiver that they may no longer use the waiver for future projects. Any member of the public may petition EPA to take action under this provision by submitting written notice along with supporting justification.

Complete and accurate Rainfall Erosivity waiver certifications not otherwise submitted electronically via EPA's eNOI system (www.epa.gov/npdes/eNOI) must be sent to one of the following addresses:

Regular U.S. Mail Delivery
EPA Stormwater Notice Processing Center
Mail Code 4203M
U.S. EPA
1200 Pennsylvania Avenue, NW
Washington, DC 20460

Overnight/Express Mail Delivery
EPA Stormwater Notice Processing Center
Room 7420
U.S. EPA
1201Constitution Avenue, NW
Washington, DC 20004

Complete and accurate TMDL or equivalent analysis waiver requests must be sent to the applicable EPA Region office specified in Appendix B.

Appendix E - Notice of Intent Form and Instructions

From the effective date of this permit, operators are to use the Notice of Intent Form contained in this Appendix to obtain permit coverage.

This Form Replaces Form 3510-9 (8-98)
Refer to the Following Pages for Instructions

Form Approved OMB Nos. 2040-0188 and 2040-0211

NPDES FORM

United States Environmental Protection Agency
Washington, DC 20460

Notice of Intent (NOI) for Storm Water Discharges Associated with Construction Activity Under an NPDES General Permit

Submission of this Notice of Intent (NOI) constitutes notice that the party identified in Section II of this form requests authorization to discharge pursuant to the NPDES Construction General Permit (CGP) permit number identified in Section I of this form. Submission of this NOI also constitutes notice that the party identified in Section II of this form meets the eligibility requirements of the CGP for the project identified in Section III of this form. Permit coverage is required prior to commencement of construction activity until you are eligible to terminate coverage as detailed in the CGP. To obtain authorization, you must submit a complete and accurate NOI form. Refer to the instructions at the end of this form.

I. Permit Number

II. Operator Information

Name:

IRS Employer Identification Number (EIN): –

Mailing Address:

Street:

City: State: Zip Code: -

Phone: - - Fax (optional): - -

E-mail:

III. Project/Site Information

Project/Site Name:

Project Street/Location:

City: State: Zip Code: -

County or similar government subdivision:

Latitude/Longitude (Use one of three possible formats, and specify method)

Latitude
1. __ __° __ __′ __ __″ N (degrees, minutes, seconds)
2. __ __° __ __. __ __′ N (degrees, minutes, decimal)
3. __ __. __ __ __ __° N (degrees decimal)

Longitude
1. __ __ __° __ __′ __ __″ W (degrees, minutes, seconds)
2. __ __ __° __ __. __ __′ W (degrees, minutes, decimal)
3. __ __ __. __ __ __ __° W (degrees decimal)

Method: ☐ U.S.G.S. topographic map ☐ EPA web site ☐ GPS ☐ Other:

If you used a U.S.G.S. topographic map, what was the scale? _____

Project located in Indian Country? ☐ YES ☐ NO

If yes, name of reservation, or if not part of a reservation, put "Not Applicable:" _____

Estimated Project Start Date: / / (Month Day Year)

Estimated Project Completion Date: / / (Month Day Year)

Estimated Area to be Disturbed (to the nearest quarter acre): .

IV. SWPPP Information

Has the SWPPP been prepared in advance of filing this NOI? ☐ YES ☐ NO

Location of SWPP for Viewing: ☐ Address in Section II ☐ Address in Section III ☐ Other

If other:

SWPPP Street:

City: State: Zip Code: -

SWPPP Contact Information (if different than that in Section II):

Name:

Phone: - - Fax (optional): - -

E-mail:

V. Discharge Information

Identify the name(s) of waterbodies to which you discharge. _____

_____

Is this discharge consistent with the assumptions and requirements of applicable EPA approved or established TMDL(s)? ☐ YES ☐ NO

VI. Endangered Species Protection

Under which criterion of the permit have you satisfied your ESA eligibility obligations?

☐ A ☐ B ☐ C ☐ D ☐ E ☐ F

If you select criterion F, provide permit tracking number of operator under which you are certifying eligibility:

VII. Certification Information

I certify under penalty of law that this document and all attachments were prepared under my direction or supervision in accordance with a system designed to assure that qualified personnel properly gathered and evaluated the information submitted. Based on my inquiry of the person or persons who manage the system, or those persons directly responsible for gathering the information, the information submitted is, to the best of my knowledge and belief, true, accurate, and complete. I am aware that there are significant penalties for submitting false information, including the possibility of fine and imprisonment for knowing violations.

Print Name:

Title:

Signature: _____ Date:

NOI Preparer (Complete if NOI was prepared by someone other than the certifier)

Prepared by:

Organization:

Phone: - - Ext. E-mail:_____

Instructions for Completing EPA Form 3510-9

Notice of Intent (NOI) for Storm Water Discharges Associated with Construction Activity Under an NPDES General Permit

NPDES Form Date | This Form Replaces Form 3510-9 (8/98) | Form Approved OMB Nos. 2040-0188 and 2040-0211

Who Must File an NOI Form

Under the provisions of the Clean Water Act, as amended (33 U.S.C. 1251 et. seq.; the Act), federal law prohibits storm water discharges from certain construction activities to waters of the U.S. unless that discharge is covered under a National Pollutant Discharge Elimination System (NPDES) Permit. Operator(s) of construction sites where one or more acres are disturbed, smaller sites that are part of a larger common plan of development or sale where there is a cumulative disturbance of at least one acre, or any other site specifically designated by the Director, must submit an NOI to obtain coverage under an NPDES general permit. Each person, firm, public organization, or any other entity that meets either of the following criteria must file this form: (1) they have operational control over construction plans and specifications, including the ability to make modifications to those plans and specifications; or (2) they have day-to-day operational control of those activities at the project necessary to ensure compliance with SWPPP requirements or other permit conditions. If you have questions about whether you need an NPDES storm water permit, or if you need information to determine whether EPA or your state agency is the permitting authority, refer to *www.epa.gov/npdes/stormwater/cgp* or telephone the Storm Water Notice Processing Center at (866) 352-7755.

Where to File NOI Form

See the applicable CGP for information on where to send your completed NOI form.

Completing the Form

Obtain and read a copy of the appropriate EPA Storm Water Construction General Permit for your area. To complete this form, type or print uppercase letters, in the appropriate areas only. Please place each character between the marks (abbreviate if necessary to stay within the number of characters allowed for each item). Use one space for breaks between words, but not for punctuation marks unless they are needed to clarify your response. If you have any questions on this form, refer to *www.epa.gov/npdes/stormwater/cgp* or telephone the Storm Water Notice Processing Center at (866) 352-7755. Please submit original document with signature in ink . do not send a photocopied signature.

Section I. Permit Number

Provide the number of the permit under which you are applying for coverage (see Appendix B of the general permit for the list of eligible permit numbers).

Section II. Operator Information

Provide the legal name of the person, firm, public organization, or any other entity that operates the project described in this application. An operator of a project is a legal entity that controls at least a portion of site operations and is not necessarily the site manager. Provide the employer identification number (EIN from the Internal Revenue Service; IRS), also commonly referred to as your taxpayer ID. If the applicant does not have an EIN enter “NA” in the space provided. Also provide the operator’s mailing address, telephone number, fax number (optional) and e-mail address (to be notified via e-mail of NOI approval when available). Correspondence for the NOI will be sent to this address.

Section III. Project/Site Information

Enter the official or legal name and complete street address, including city, state, zip code, and county or similar government subdivision of the project or site. If the project or site lacks a street address, indicate the general location of the site (e.g., Intersection of State Highways 61 and 34). Complete site information must be provided for permit coverage to be granted.

The applicant must also provide the latitude and longitude of the facility either in degrees, minutes, seconds; degrees, minutes, decimal; or decimal format. The latitude and longitude of your facility can be determined in several different ways, including through the use of global positioning system (GPS) receivers, U.S. Geological Survey (U.S.G.S.) topographic or quadrangle maps, and EPA’s web-based siting tools, among others. Refer to *www.epa.gov/npdes/stormwater/cgp* for further guidance on the use of these methodologies. For consistency, EPA requests that measurements be taken from the approximate center of the construction site. Applicants must specify which method they used to determine latitude and longitude. If a U.S.G.S. topographic map is used, applicants are required to specify the scale of the map used.

Indicate whether the project is in Indian country, and if so, provide the name of the Reservation. If the project is in Indian Country Lands that are not part of a Reservation, indicate “not applicable” in the space provided.

Enter the estimated construction start and completion dates using four digits for the year (i.e., 05/27/1998). Enter the estimated area to be disturbed including but not limited to: grubbing, excavation, grading, and utilities and infrastructure installation. Indicate to the nearest quarter acre. Note: 1 acre = 43,560 sq. ft.

Section IV. SWPPP Information

Indicate whether or not the SWPPP was prepared in advance of filing the NOI form. Check the appropriate box for the location where the SWPPP may be viewed. Provide the name, fax number (optional), and e-mail address of the contact person if different than that listed in Section II of the NOI form.

Section V. Discharge Information

Enter the name(s) of receiving waterbodies to which the project’s storm water will discharge. These should be the first bodies of water that the discharge will reach. (Note: If you discharge to more than one waterbody, please indicate all such waters in the space provided and attach a separate sheet if necessary.) For example, if the discharge leaves your

site and travels through a roadside swale or a storm sewer and then enters a stream that flows to a river, the stream would be the receiving waterbody. Waters of the U.S. include lakes, streams, creeks, rivers, wetlands, impoundments, estuaries, bays, oceans, and other surface bodies of water within the confines of the U.S. and U.S. coastal waters. Waters of the U.S. do not include man-made structures created solely for the purpose of wastewater treatment. U.S. Geological Survey topographical maps may be used to make this determination. If the map does not provide a name, use a format such as "unnamed tributary to Cross Creek". If you discharge into a municipal separate storm sewer system (MS4), you must identify the waterbody into which that portion of the storm sewer discharges. That information should be readily available from the operator of the MS4.

Indicate whether your storm water discharges from construction activities will be consistent with the assumptions and requirements of applicable EPA approved or established TMDL(s). To answer this question, refer to *www.epa.gov/npdes/stormwater/cgp* for state- and regional-specific TMDL information related to the construction general permit. You may also have to contact your EPA regional office or state agency. If there are no applicable TMDLs or no related requirements, please check the "yes" box in the NOI form.

Section VI. Endangered Species Information

Indicate for which criterion (i.e., A, B, C, D, E, or F) of the permit the applicant is eligible with regard to protection of federally listed endangered and threatened species, and designated critical habitat. See Part 1.3.C.6 and Appendix C of the permit. If you select criterion F, provide the permit tracking number of the operator under which you are certifying eligibility. The permit tracking number is the number assigned to the operator by the Storm Water Notice Processing Center after EPA acceptance of a complete NOI.

Section VII. Certification Information

All applications, including NOIs, must be signed as follows: *For a corporation:* By a responsible corporate officer. For the purpose of this Section, a responsible corporate officer means:

(i) a president, secretary, treasurer, or vice-president of the corporation in charge of a principal business function, or any other person who performs similar policy- or decision-making functions for the corporation, or (ii) the manager of one or more manufacturing, production, or operating facilities, provided, the manager is authorized to make management decisions which govern the operation of the regulated facility including having the explicit or implicit duty of making major capital investment recommendations, and initiating and directing other comprehensive measures to assure long-term environmental compliance with environmental laws and regulations; the manager can ensure that the necessary systems are established or actions taken to gather complete and accurate information for permit application requirements; and where authority to sign documents has been assigned or delegated to the manager in accordance with corporate procedures.

For a partnership or sole proprietorship: By a general partner or the proprietor, respectively; or

For a municipality, state, federal, or other public agency: By either a principal executive officer or ranking elected official. For purposes of this Part, a principal executive officer of a federal agency includes (i) the chief executive officer of the agency, or (ii) a senior executive officer having responsibility for the overall operations of a principal geographic unit of the agency (e.g., Regional Administrator of EPA). Include the name and title of the person signing the form and the date of signing. An unsigned or undated NOI form will not be considered eligible for permit coverage.

If the NOI was prepared by someone other than the certifier (for example, if the NOI was prepared by the facility SWPPP contact or a consultant for the certifier's signature), include the name, organization, phone number and email address of the NOI preparer.

Paperwork Reduction Act Notice

Public reporting burden for this application is estimated to average 3.7 hours. This estimate includes time for reviewing instructions, searching existing data sources, gathering and maintaining the data needed, and completing and reviewing the collection of information. An agency may not conduct or sponsor, and a person is not required to respond to, a collection of information unless it displays a currently valid OMB control number. Send comments regarding the burden estimate, any other aspect of the collection of information, or suggestions for improving this form, including any suggestions which may increase or reduce this burden to: Chief, Information Policy Branch 2136, U.S. Environmental Protection, Agency, 1200 Pennsylvania Avenue, NW, Washington, D.C. 20460. Include the OMB control number on any correspondence. Do not send the completed form to this address. **Visit this website for mailing instructions:** *www.epa.gov/npdes/stormwater/mail*.

Appendix F - Notice of Termination Form and Instructions

From the effective date of this permit, operators are to use the Notice of Termination Form contained in this Appendix to terminate permit coverage.

This Form Replaces Form 3517-7 (8-98)
Refer to the Following Page for Instructions

Form Approved OMB Nos. 2040-0086 and 2040-0211

NPDES Form

United States Environmental Protection Agency
Washington, DC 20460

Notice of Termination (NOT) of Coverage Under an NPDES General Permit for Storm Water Discharges Associated with Construction Activity

Submission of this Notice of Termination constitutes notice that the party identified in Section II of this form is no longer authorized to discharge storm water associated with construction activity under the NPDES program from the site identified in Section III of this form. All necessary information must be included on this form. Refer to the instructions at the end of this form.

I. Permit Information

NPDES Storm Water General Permit Tracking Number: _____

Reason for Termination (Check only one):

- ☐ Final stabilization has been achieved on all portions of the site for which you are responsible.
- ☐ Another operator has assumed control, according to Appendix G, Section 11.C of the CGP, over all areas of the site that have not been finally stabilized.
- ☐ Coverage under an alternative NPDES permit has been obtained.
- ☐ For residential construction only, temporary stabilization has been completed and the residence has been transferred to the homeowner.

II. Operator Information

Name: _____

IRS Employer Identification Number (EIN): ___ - _____

Mailing Address:

Street: _____

City: _____ State: ___ Zip Code: _____ - ____

Phone: ___ - ___ - _____ Fax (optional): ___ - ___ - _____

E-mail (optional): _____

III. Project/Site Information

Project/Site Name: _____

Project Street/Location: _____

City: _____ State: ___ Zip Code: _____ - ____

County or similar government subdivision: _____

IV. Certification Information

I certify under penalty of law that this document and all attachments were prepared under my direction or supervision in accordance with a system designed to assure that qualified personnel properly gathered and evaluated the information submitted. Based on my inquiry of the person or persons who manage the system, or those persons directly responsible for gathering the information, the information submitted is, to the best of my knowledge and belief, true, accurate, and complete. I am aware that there are significant penalties for submitting false information, including the possibility of fine and imprisonment for knowing violations.

Print Name: _____

Print Title: _____

Signature: _____

Date: _____

Instructions for Completing EPA Form 3510-13

Notice of Termination (NOT) of Coverage Under an NPDES General Permit for Storm Water Discharges Associated with Construction Activity

NPDES Form This Form Replaces Form 3517-7 (8-98) Form Approved OMB Nos. 2040-0086 and 2040-0211

Who May File an NOT Form

Permittees who are presently covered under the EPA-issued National Pollutant Discharge Elimination System (NPDES) General Permit for Storm Water Discharges Associated with Construction Activity may submit an NOT form when final stabilization has been achieved on all portions of the site for which you are responsible; another operator has assumed control in accordance with Appendix G, Section 11.C of the General Permit over all areas of the site that have not been finally stabilized; coverage under an alternative NPDES permit has been obtained; or for residential construction only, temporary stabilization has been completed and the residence has been transferred to the homeowner.

"Final stabilization" means that all soil disturbing activities at the site have been completed and that a uniform perennial vegetative cover with a density of at least 70% of the native background vegetative cover for the area has been established on all unpaved areas and areas not covered by permanent structures, or equivalent permanent stabilization measures (such as the use of riprap, gabions, or geotextiles) have been employed. See "final stabilization" definition in Appendix A of the Construction General Permit for further guidance where background native vegetation covers less than 100 percent of the ground, in arid or semi-arid areas, for individual lots in residential construction, and for construction projects on land used for agricultural purposes.

Completing the Form

Type or print, using uppercase letters, in the appropriate areas only. Please place each character between the marks. Abbreviate if necessary to stay within the number of characters allowed for each item. Use only one space for breaks between words, but not for punctuation marks unless they are needed to clarify your response. If you have any questions about this form, refer to *www.epa.gov/npdes/stormwater/cgp* or telephone the Storm Water Notice Processing Center at (866) 352-7755. Please submit original document with signature in ink - do not send a photocopied signature.

Section I. Permit Number

Enter the existing NPDES Storm Water General Permit Tracking Number assigned to the project by EPA's Storm Water Notice Processing Center. If you do not know the permit tracking number, refer to *www.epa.gov/npdes/stormwater/cgp* or contact the Storm Water Notice Processing Center at (866) 352-7755.

Indicate your reason for submitting this Notice of Termination by checking the appropriate box. Check only one:

Final stabilization has been achieved on all portions of the site for which you are responsible.

Another operator has assumed control according to Appendix G, Section 11.C over all areas of the site that have not been finally stabilized.

Coverage under an alternative NPDES permit has been obtained.

For residential construction only, if temporary stabilization has been completed and the residence has been transferred to the homeowner.

Section II. Operator Information

Provide the legal name of the person, firm, public organization, or any other entity that operates the project described in this application and is covered by the permit tracking number identified in Section I. The operator of the project is the legal entity that controls the site operation, rather than the site manager. Provide the employer identification number (EIN from the Internal Revenue Service; IRS). If the applicant does not have an EIN enter "NA" in the space provided. Enter the complete mailing address and telephone number of the operator. *Optional:* enter the fax number and e-mail address of the operator.

Section III. Project/Site Information

Enter the official or legal name and complete street address, including city, state, zip code, and county or similar government subdivision of the project or site. If the project or site lacks a street address, indicate the general location of the site (e.g., Intersection of State Highways 61 and 34). Complete site information must be provided for termination of permit coverage to be valid.

Section IV. Certification Information

All applications, including NOIs, must be signed as follows:

For a corporation: By a responsible corporate officer. For the purpose of this Part, a responsible corporate officer means: (i) a president, secretary, treasurer, or vice-president of the corporation in charge of a principal business function, or any other person who performs similar policy- or decision-making functions for the corporation, or (ii) the manager of one or more manufacturing, production, or operating facilities, provided, the manager is authorized to make management decisions which govern the operation of the regulated facility including having the explicit or implicit duty of making major capital investment recommendations, and initiating and directing other comprehensive measures to assure long-term environmental compliance with environmental laws and regulations; the manager can ensure that the necessary systems are established or actions taken to gather complete and accurate information for permit application requirements; and where authority to sign documents has been assigned or delegated to the manager in accordance with corporate procedures.

For a partnership or sole proprietorship: By a general partner or the proprietor, respectively; or

For a municipality, state, federal, or other public agency: By either a principal executive officer or ranking elected official. For purposes of this Part, a principal executive officer of a federal agency includes (i) the chief executive officer of the agency, or (ii) a senior executive officer having responsibility for the overall operations of a principal geographic unit of the agency (e.g., Regional Administrator of EPA).

Include the name and title of the person signing the form and the date of signing. An unsigned or undated NOT form will not be considered valid termination of permit coverage.

Paperwork Reduction Act Notice

Public reporting burden for this application is estimated to average 0.5 hours per notice, including time for reviewing instructions, searching existing data sources, gathering and maintaining the data needed, and completing and reviewing the collection of information. An agency may not conduct or sponsor, and a person is not required to respond to, a collection of information unless it displays a currently valid OMB control number. Send comments regarding the burden estimate, any other aspect of the collection of information, or suggestions for improving this form including any suggestions which may increase or reduce this burden to: Chief, Information Policy Branch, 2136, U.S. Environmental Protection Agency, 1200 Pennsylvania Avenue, NW, Washington, DC 20460. Include the OMB number on any correspondence. Do not send the completed form to this address. **Visit this website for mailing instructions:** http://cfpub.epa.gov/npdes/stormwater/application_coverage.cfm#mail

Appendix G - Standard Permit Conditions

STANDARD PERMIT CONDITIONS

1. Duty To Comply

You must comply with all conditions of this permit. Any permit noncompliance constitutes a violation of the Clean Water Act and is grounds for enforcement action; for permit termination, revocation and reissuance, or modification; or for denial of a permit renewal application.

A. You must comply with effluent standards or prohibitions established under section 307(a) of the Clean Water Act for toxic pollutants and with standards for sewage sludge use or disposal established under section 405(d) of the CWA within the time provided in the regulations that establish these standards or prohibitions or standards for sewage sludge use or disposal, even if the permit has not yet been modified to incorporate the requirement.

B. The Clean Water Act provides that any person who violates section 301, 302, 306, 307, 308, 318 or 405 of the Act, or any permit condition or limitation implementing any such sections in a permit issued under section 402, or any requirement imposed in a pretreatment program approved under sections 402(a)(3) or 402(b)(8) of the Act, is subject to a civil penalty not to exceed the maximum amounts authorized by Section 309(d) of the Act and the Federal Civil Penalties Inflation Adjustment Act (28 U.S.C. §2461 note) as amended by the Debt Collection Improvement Act (31 U.S.C. §3701 note) (currently $27,500 per day for each violation).

   The Clean Water Act provides that any person who negligently violates sections 301, 302, 306, 307, 308, 318, or 405 of the Act, or any condition or limitation implementing any of such sections in a permit issued under section 402 of the Act, or any requirement imposed in a pretreatment program approved under section 402(a)(3) or 402(b)(8) of the Act, is subject to criminal penalties of $2,500 to $25,000 per day of violation, or imprisonment of not more than 1 year, or both. In the case of a second or subsequent conviction for a negligent violation, a person shall be subject to criminal penalties of not more than $50,000 per day of violation, or by imprisonment of not more than 2 years, or both. Any person who knowingly violates such sections, or such conditions or limitations is subject to criminal penalties of $5,000 to $50,000 per day of violation, or imprisonment for not more than 3 years, or both. In the case of a second or subsequent conviction for a knowing violation, a person shall be subject to criminal penalties of not more than $100,000 per day of violation, or imprisonment of not more than 6 years, or both. Any person who knowingly violates section 301, 302, 303, 306, 307, 308, 318 or 405 of the Act, or any permit condition or limitation implementing any of such sections in a permit issued under section 402 of the Act, and who knows at that time that he thereby places another person in imminent danger of death or serious bodily injury, shall, upon conviction, be subject to a fine of not more than $250,000 or imprisonment of not more than 15 years, or both. In the case of a second or subsequent conviction for a knowing endangerment violation, a person shall be subject to a fine of not more than $500,000 or by imprisonment of not more than 30 years, or both. An organization, as defined in section 309(c)(3)(B)(iii) of the CWA, shall, upon conviction of violating the imminent danger provision, be subject to a fine of not more than $1,000,000 and can be fined up to $2,000,000 for second or subsequent convictions.

C. Any person may be assessed an administrative penalty by the Administrator for violating section 301, 302, 306, 307, 308, 318 or 405 of this Act, or any permit condition or limitation implementing any of such sections in a permit issued under section 402 of this Act. Pursuant to 40 CFR Part 19 and the Act, administrative penalties for Class I violations are not to exceed the maximum amounts authorized by Section 309(g)(2)(A) of the Act and the Federal Civil Penalties Inflation Adjustment Act (28 U.S.C. §2461 note) as amended by the Debt Collection Improvement Act (31 U.S.C. §3701 note) (currently $11,000 per violation, with the maximum amount of any Class I penalty assessed not to exceed $27,500). Pursuant to 40 CFR Part 19 and the Act, penalties for Class II violations are not to exceed the maximum amounts authorized by Section 309(g)(2)(B) of the Act and the Federal Civil Penalties Inflation Adjustment Act (28 U.S.C. §2461 note) as amended by the Debt Collection Improvement Act (31 U.S.C. §3701 note) (currently $11,000 per day for each day during which the violation continues, with the maximum amount of any Class II penalty not to exceed $137,500).

2. Duty to Reapply

If you wish to continue an activity regulated by this permit after the expiration date of this permit, you must apply for and obtain a new permit.

3. Need to Halt or Reduce Activity Not a Defense

It shall not be a defense for you in an enforcement action that it would have been necessary to halt or reduce the permitted activity in order to maintain compliance with the conditions of this permit.

4. Duty to Mitigate

You must take all reasonable steps to minimize or prevent any discharge or sludge use or disposal in violation of this permit which has a reasonable likelihood of adversely affecting human health or the environment.

5. Proper Operation and Maintenance

You must at all times properly operate and maintain all facilities and systems of treatment and control (and related appurtenances) which are installed or used by you to achieve compliance with the conditions of this permit. Proper operation and maintenance also includes adequate laboratory controls and appropriate quality assurance procedures. This provision requires the operation of backup or auxiliary facilities or similar systems which are installed by you only when the operation is necessary to achieve compliance with the conditions of this permit.

6. Permit Actions

This permit may be modified, revoked and reissued, or terminated for cause. Your filing of a request for a permit modification, revocation and reissuance, or termination, or a notification of planned changes or anticipated noncompliance does not stay any permit condition.

7. Property Rights

This permit does not convey any property rights of any sort, or any exclusive privileges.

8. Duty to Provide Information

You must furnish to EPA, within a reasonable time, any information which EPA may request to determine whether cause exists for modifying, revoking and reissuing, or terminating this permit or to determine compliance with this permit. You must also furnish to EPA upon request, copies of records required to be kept by this permit.

9. Inspection and Entry

You must allow EPA, or an authorized representative (including an authorized contractor acting as a representative of the Administrator), upon presentation of credentials and other documents as may be required by law, to:

A. Enter upon your premises where a regulated facility or activity is located or conducted, or where records must be kept under the conditions of this permit;
B. Have access to and copy, at reasonable times, any records that must be kept under the conditions of this permit;
C. Inspect at reasonable times any facilities, equipment (including monitoring and control equipment), practices, or operations regulated or required under this permit; and
D. Sample or monitor at reasonable times, for the purposes of assuring permit compliance or as otherwise authorized by the Clean Water Act, any substances or parameters at any location.

10. Monitoring and Records

A. Samples and measurements taken for the purpose of monitoring must be representative of the monitored activity.
B. You must retain records of all monitoring information, including all calibration and maintenance records and all original strip chart recordings for continuous monitoring instrumentation, copies of all reports required by this permit, and records of all data used to complete the application for this permit, for a period of at least 3 years from the date of the sample, measurement, report or application. This period may be extended by request of EPA at any time.
C. Records of monitoring information must include:
    1. The date, exact place, and time of sampling or measurements;
    2. The individual(s) who performed the sampling or measurements;
    3. The date(s) analyses were performed
    4. The individual(s) who performed the analyses;
    5. The analytical techniques or methods used; and
    6. The results of such analyses.
D. Monitoring results must be conducted according to test procedures approved under 40 CFR Part 136 or, in the case of sludge use or disposal, approved under 40 CFR Part 136 unless otherwise specified in 40 CFR Part 503, unless other test procedures have been specified in the permit.
E. The Clean Water Act provides that any person who falsifies, tampers with, or knowingly renders inaccurate any monitoring device or method required to be maintained under this permit shall, upon conviction, be punished by a fine of not more than $10,000, or by imprisonment for not more than 2 years, or both. If a conviction of a person is for a violation committed after a first conviction of such person under this paragraph, punishment is a fine of not more than $20,000 per day of violation, or by imprisonment of not more than 4 years, or both.

11. Signatory Requirements

A. All applications, including NOIs, must be signed as follows:
    1. For a corporation: By a responsible corporate officer. For the purpose of this Part, a responsible corporate officer means: (i) a president, secretary, treasurer, or vice-president of the corporation in charge of a principal business function, or any

other person who performs similar policy- or decision-making functions for the corporation, or (ii) the manager of one or more manufacturing, production, or operating facilities, provided, the manager is authorized to make management decisions which govern the operation of the regulated facility including having the explicit or implicit duty of making major capital investment recommendations, and initiating and directing other comprehensive measures to assure long term environmental compliance with environmental laws and regulations; the manager can ensure that the necessary systems are established or actions taken to gather complete and accurate information for permit application requirements; and where authority to sign documents has been assigned or delegated to the manager in accordance with corporate procedures.

2. For a partnership or sole proprietorship: By a general partner or the proprietor, respectively; or
3. For a municipality, state, federal, or other public agency: By either a principal executive officer or ranking elected official. For purposes of this Part, a principal executive officer of a federal agency includes (i) the chief executive officer of the agency, or (ii) a senior executive officer having responsibility for the overall operations of a principal geographic unit of the agency (e.g., Regional Administrator of EPA).

B. All reports required by this permit, including SWPPPs, must be signed by a person described in Appendix G, Subsection 11.A above or by a duly authorized representative of that person. A person is a duly authorized representative only if:
   1. The authorization is made in writing by a person described in Appendix G, Subsection 11.A;
   2. The authorization specifies either an individual or a position having responsibility for the overall operation of the regulated facility or activity such as the position of plant manager, operator of a well or a well field, superintendent, position of equivalent responsibility, or an individual or position having overall responsibility for environmental matters for the company. (A duly authorized representative may thus be either a named individual or any individual occupying a named position); and
   3. The signed and dated written authorization is included in the SWPPP. A copy must be submitted to EPA, if requested.

C. Changes to Authorization. If an authorization under Part 2.1 is no longer accurate because a different operator has responsibility for the overall operation of the construction site, a new NOI satisfying the requirements of Part 2.1 must be submitted to EPA prior to or together with any reports, information, or applications to be signed by an authorized representative. The change in authorization must be submitted within the time frame specified in Part 2.4, and sent to the address specified in Part 2.2.

D. Any person signing documents required under the terms of this permit must include the following certification:
   "I certify under penalty of law that this document and all attachments were prepared under my direction or supervision in accordance with a system designed to assure that qualified personnel properly gathered and evaluated the information submitted. Based on my inquiry of the person or persons who manage the system, or those persons

directly responsible for gathering the information, the information submitted is, to the best of my knowledge and belief, true, accurate, and complete. I am aware that there are significant penalties for submitting false information, including the possibility of fine and imprisonment for knowing violations."

E. The CWA provides that any person who knowingly makes any false statement, representation, or certification in any record or other document submitted or required to be maintained under this permit, including monitoring reports or reports of compliance or non-compliance shall, upon conviction, be punished by a fine of not more than $10,000 per violation, or by imprisonment for not more than 6 months per violation, or by both.

12. Reporting Requirements

A. Planned changes. You must give notice to EPA as soon as possible of any planned physical alterations or additions to the permitted facility. Notice is required only when:
   1. The alteration or addition to a permitted facility may meet one of the criteria for determining whether a facility is a new source in 40 CFR §122.29(b); or
   2. The alteration or addition could significantly change the nature or increase the quantity of pollutants discharged. This notification applies to pollutants which are subject neither to effluent limitations in the permit, nor to notification requirements under 40 CFR §122.42(a)(1).

B. Anticipated noncompliance. You must give advance notice to EPA of any planned changes in the permitted facility or activity which may result in noncompliance with permit requirements.

C. Transfers. This permit is not transferable to any person except after notice to EPA. EPA may require modification or revocation and reissuance of the permit to change the name of the permittee and incorporate such other requirements as may be necessary under the Clean Water Act. (See 40 CFR §122.61; in some cases, modification or revocation and reissuance is mandatory.)

D. Monitoring reports. Monitoring results must be reported at the intervals specified elsewhere in this permit.
   1. Monitoring results must be reported on a Discharge Monitoring Report (DMR) or forms provided or specified by EPA for reporting results of monitoring of sludge use or disposal practices.
   2. If you monitor any pollutant more frequently than required by the permit using test procedures approved under 40 CFR Part 136 or, in the case of sludge use or disposal, approved under 40 CFR Part 136 unless otherwise specified in 40 CFR Part 503, or as specified in the permit, the results of this monitoring must be included in the calculation and reporting of the data submitted in the DMR or sludge reporting form specified by EPA.
   3. Calculations for all limitations which require averaging of measurements must use an arithmetic mean.

E. Compliance schedules. Reports of compliance or noncompliance with, or any progress reports on, interim and final requirements contained in any compliance schedule of this permit must be submitted no later than 14 days following each schedule date.

F. Twenty-four hour reporting.

1. You must report any noncompliance which may endanger health or the environment. Any information must be provided orally within 24 hours from the time you become aware of the circumstances. A written submission must also be provided within five days of the time you become aware of the circumstances. The written submission must contain a description of the noncompliance and its cause; the period of noncompliance, including exact dates and times, and if the noncompliance has not been corrected, the anticipated time it is expected to continue; and steps taken or planned to reduce, eliminate, and prevent reoccurrence of the noncompliance.
2. The following shall be included as information which must be reported within 24 hours under this paragraph.
   a. Any unanticipated bypass which exceeds any effluent limitation in the permit. (See 40 CFR §122.41(g).)
   b. Any upset which exceeds any effluent limitation in the permit
   c. Violation of a maximum daily discharge limitation for any of the pollutants listed by EPA in the permit to be reported within 24 hours. (See 40 CFR §122.44(g).)

13. EPA may waive the written report on a case-by-case basis for reports under Appendix G, Subsection 12.F.2 if the oral report has been received within 24 hours.

G. Other noncompliance. You must report all instances of noncompliance not reported under Appendix G, Subsections 12.D, 12.E, and 12.F, at the time monitoring reports are submitted. The reports must contain the information listed in Appendix G, Subsection 12.F.

H. Other information. Where you become aware that you failed to submit any relevant facts in a permit application, or submitted incorrect information in a permit application or in any report to the Permitting Authority, you must promptly submit such facts or information.

13. Bypass

A. Definitions.
   1. Bypass means the intentional diversion of waste streams from any portion of a treatment facility
   2. Severe property damage means substantial physical damage to property, damage to the treatment facilities which causes them to become inoperable, or substantial and permanent loss of natural resources which can reasonably be expected to occur in the absence of a bypass. Severe property damage does not mean economic loss caused by delays in production.

B. Bypass not exceeding limitations. You may allow any bypass to occur which does not cause effluent limitations to be exceeded, but only if it also is for essential maintenance to assure efficient operation. These bypasses are not subject to the provisions of Appendix G, Subsections 13.C and 13.D.

C. Notice–
   1. Anticipated bypass. If you know in advance of the need for a bypass, you must submit prior notice, if possible at least ten days before the date of the bypass.
   2. Unanticipated bypass. You must submit notice of an unanticipated bypass as required in Appendix G, Subsection 12.F (24-hour notice).

D. Prohibition of bypass.
   1. Bypass is prohibited, and EPA may take enforcement action against you for bypass, unless:
      a. Bypass was unavoidable to prevent loss of life, personal injury, or severe property damage;
      b. There were no feasible alternatives to the bypass, such as the use of auxiliary treatment facilities, retention of untreated wastes, or maintenance during normal periods of equipment downtime. This condition is not satisfied if adequate back-up equipment should have been installed in the exercise of reasonable engineering judgment to prevent a bypass which occurred during normal periods of equipment downtime or preventive maintenance; and
      c. You submitted notices as required under Appendix G, Subsection 13.C.
   2. EPA may approve an anticipated bypass, after considering its adverse effects, if EPA determines that it will meet the three conditions listed above in Appendix G, Subsection 13.D.1.

14. Upset

A. Definition. Upset means an exceptional incident in which there is unintentional and temporary noncompliance with technology based permit effluent limitations because of factors beyond your reasonable control. An upset does not include noncompliance to the extent caused by operational error, improperly designed treatment facilities, inadequate treatment facilities, lack of preventive maintenance, or careless or improper operation.

B. Effect of an upset. An upset constitutes an affirmative defense to an action brought for noncompliance with such technology based permit effluent limitations if the requirements of Appendix G, Subsection 14.C are met. No determination made during administrative review of claims that noncompliance was caused by upset, and before an action for noncompliance, is final administrative action subject to judicial review.

C. Conditions necessary for a demonstration of upset. A permittee who wishes to establish the affirmative defense of upset must demonstrate, through properly signed, contemporaneous operating logs, or other relevant evidence that:
   1. An upset occurred and that you can identify the cause(s) of the upset;
   2. The permitted facility was at the time being properly operated; and
   3. You submitted notice of the upset as required in Appendix G, Subsection 12.F.2.b(24 hour notice).
   4. You complied with any remedial measures required under Appendix G, Section 4.

D. Burden of proof. In any enforcement proceeding, you, as the one seeking to establish the occurrence of an upset, has the burden of proof.

APPENDIX D: COPY OF NOI

Appendix E - Notice of Intent Form and Instructions

From the effective date of this permit, operators are to use the Notice of Intent Form contained in this Appendix to obtain permit coverage.

This Form Replaces Form 3510-9 (8-98)
Refer to the Following Pages for Instructions

Form Approved OMB Nos. 2040-0188 and 2040-0211

NPDES FORM

United States Environmental Protection Agency
Washington, DC 20460

Notice of Intent (NOI) for Storm Water Discharges Associated with Construction Activity Under an NPDES General Permit

Submission of this Notice of Intent (NOI) constitutes notice that the party identified in Section II of this form requests authorization to discharge pursuant to the NPDES Construction General Permit (CGP) permit number identified in Section I of this form. Submission of this NOI also constitutes notice that the party identified in Section II of this form meets the eligibility requirements of the CGP for the project identified in Section III of this form. Permit coverage is required prior to commencement of construction activity until you are eligible to terminate coverage as detailed in the CGP. To obtain authorization, you must submit a complete and accurate NOI form. Refer to the instructions at the end of this form.

I. Permit Number

II. Operator Information

Name:

IRS Employer Identification Number (EIN): –

Mailing Address:

Street:

City: State: Zip Code: -

Phone: - - Fax (optional): - -

E-mail:

III. Project/Site Information

Project/Site Name:

Project Street/Location:

City: State: Zip Code: -

County or similar government subdivision:

Latitude/Longitude (Use one of three possible formats, and specify method)

Latitude
1. __ __° __ __′ __ __″ N (degrees, minutes, seconds)
2. __ __° __ __. __ __′ N (degrees, minutes, decimal)
3. __ __. __ __ __ __° N (degrees decimal)

Longitude
1. __ __ __° __ __′ __ __″ W (degrees, minutes, seconds)
2. __ __ __° __ __. __ __′ W (degrees, minutes, decimal)
3. __ __ __. __ __ __ __° W (degrees decimal)

Method: ☐ U.S.G.S. topographic map ☐ EPA web site ☐ GPS ☐ Other:

If you used a U.S.G.S. topographic map, what was the scale? _____

Project located in Indian Country? ☐ YES ☐ NO

If yes, name of reservation, or if not part of a reservation, put "Not Applicable:" _____

Estimated Project Start Date: / / (Month Day Year)

Estimated Project Completion Date: / / (Month Day Year)

Estimated Area to be Disturbed (to the nearest quarter acre): .

IV. SWPPP Information

Has the SWPPP been prepared in advance of filing this NOI? ☐ YES ☐ NO

Location of SWPP for Viewing: ☐ Address in Section II ☐ Address in Section III ☐ Other

If other:

SWPPP Street:

City: State: Zip Code: -

SWPPP Contact Information (if different than that in Section II):

Name:

Phone: - - Fax (optional): - -

E-mail:

V. Discharge Information

Identify the name(s) of waterbodies to which you discharge. _____

_____

Is this discharge consistent with the assumptions and requirements of applicable EPA approved or established TMDL(s)? ☐ YES ☐ NO

VI. Endangered Species Protection

Under which criterion of the permit have you satisfied your ESA eligibility obligations?

☐ A ☐ B ☐ C ☐ D ☐ E ☐ F

If you select criterion F, provide permit tracking number of operator under which you are certifying eligibility:

VII. Certification Information

I certify under penalty of law that this document and all attachments were prepared under my direction or supervision in accordance with a system designed to assure that qualified personnel properly gathered and evaluated the information submitted. Based on my inquiry of the person or persons who manage the system, or those persons directly responsible for gathering the information, the information submitted is, to the best of my knowledge and belief, true, accurate, and complete. I am aware that there are significant penalties for submitting false information, including the possibility of fine and imprisonment for knowing violations.

Print Name:

Title:

Signature: _____ Date:

NOI Preparer (Complete if NOI was prepared by someone other than the certifier)

Prepared by:

Organization:

Phone: - - Ext. E-mail:_____

Instructions for Completing EPA Form 3510-9

Notice of Intent (NOI) for Storm Water Discharges Associated with Construction Activity Under an NPDES General Permit

NPDES Form Date | This Form Replaces Form 3510-9 (8/98) | Form Approved OMB Nos. 2040-0188 and 2040-0211

Who Must File an NOI Form

Under the provisions of the Clean Water Act, as amended (33 U.S.C. 1251 et. seq.; the Act), federal law prohibits storm water discharges from certain construction activities to waters of the U.S. unless that discharge is covered under a National Pollutant Discharge Elimination System (NPDES) Permit. Operator(s) of construction sites where one or more acres are disturbed, smaller sites that are part of a larger common plan of development or sale where there is a cumulative disturbance of at least one acre, or any other site specifically designated by the Director, must submit an NOI to obtain coverage under an NPDES general permit. Each person, firm, public organization, or any other entity that meets either of the following criteria must file this form: (1) they have operational control over construction plans and specifications, including the ability to make modifications to those plans and specifications; or (2) they have day-to-day operational control of those activities at the project necessary to ensure compliance with SWPPP requirements or other permit conditions. If you have questions about whether you need an NPDES storm water permit, or if you need information to determine whether EPA or your state agency is the permitting authority, refer to *www.epa.gov/npdes/stormwater/cgp* or telephone the Storm Water Notice Processing Center at (866) 352-7755.

Where to File NOI Form

See the applicable CGP for information on where to send your completed NOI form.

Completing the Form

Obtain and read a copy of the appropriate EPA Storm Water Construction General Permit for your area. To complete this form, type or print uppercase letters, in the appropriate areas only. Please place each character between the marks (abbreviate if necessary to stay within the number of characters allowed for each item). Use one space for breaks between words, but not for punctuation marks unless they are needed to clarify your response. If you have any questions on this form, refer to *www.epa.gov/npdes/stormwater/cgp* or telephone the Storm Water Notice Processing Center at (866) 352-7755. Please submit original document with signature in ink . do not send a photocopied signature.

Section I. Permit Number

Provide the number of the permit under which you are applying for coverage (see Appendix B of the general permit for the list of eligible permit numbers).

Section II. Operator Information

Provide the legal name of the person, firm, public organization, or any other entity that operates the project described in this application. An operator of a project is a legal entity that controls at least a portion of site operations and is not necessarily the site manager. Provide the employer identification number (EIN from the Internal Revenue Service; IRS), also commonly referred to as your taxpayer ID. If the applicant does not have an EIN enter “NA” in the space provided. Also provide the operator’s mailing address, telephone number, fax number (optional) and e-mail address (to be notified via e-mail of NOI approval when available). Correspondence for the NOI will be sent to this address.

Section III. Project/Site Information

Enter the official or legal name and complete street address, including city, state, zip code, and county or similar government subdivision of the project or site. If the project or site lacks a street address, indicate the general location of the site (e.g., Intersection of State Highways 61 and 34). Complete site information must be provided for permit coverage to be granted.

The applicant must also provide the latitude and longitude of the facility either in degrees, minutes, seconds; degrees, minutes, decimal; or decimal format. The latitude and longitude of your facility can be determined in several different ways, including through the use of global positioning system (GPS) receivers, U.S. Geological Survey (U.S.G.S.) topographic or quadrangle maps, and EPA’s web-based siting tools, among others. Refer to *www.epa.gov/npdes/stormwater/cgp* for further guidance on the use of these methodologies. For consistency, EPA requests that measurements be taken from the approximate center of the construction site. Applicants must specify which method they used to determine latitude and longitude. If a U.S.G.S. topographic map is used, applicants are required to specify the scale of the map used.

Indicate whether the project is in Indian country, and if so, provide the name of the Reservation. If the project is in Indian Country Lands that are not part of a Reservation, indicate “not applicable” in the space provided.

Enter the estimated construction start and completion dates using four digits for the year (i.e., 05/27/1998). Enter the estimated area to be disturbed including but not limited to: grubbing, excavation, grading, and utilities and infrastructure installation. Indicate to the nearest quarter acre. Note: 1 acre = 43,560 sq. ft.

Section IV. SWPPP Information

Indicate whether or not the SWPPP was prepared in advance of filing the NOI form. Check the appropriate box for the location where the SWPPP may be viewed. Provide the name, fax number (optional), and e-mail address of the contact person if different than that listed in Section II of the NOI form.

Section V. Discharge Information

Enter the name(s) of receiving waterbodies to which the project’s storm water will discharge. These should be the first bodies of water that the discharge will reach. (Note: If you discharge to more than one waterbody, please indicate all such waters in the space provided and attach a separate sheet if necessary.) For example, if the discharge leaves your

site and travels through a roadside swale or a storm sewer and then enters a stream that flows to a river, the stream would be the receiving waterbody. Waters of the U.S. include lakes, streams, creeks, rivers, wetlands, impoundments, estuaries, bays, oceans, and other surface bodies of water within the confines of the U.S. and U.S. coastal waters. Waters of the U.S. do not include man-made structures created solely for the purpose of wastewater treatment. U.S. Geological Survey topographical maps may be used to make this determination. If the map does not provide a name, use a format such as "unnamed tributary to Cross Creek". If you discharge into a municipal separate storm sewer system (MS4), you must identify the waterbody into which that portion of the storm sewer discharges. That information should be readily available from the operator of the MS4.

Indicate whether your storm water discharges from construction activities will be consistent with the assumptions and requirements of applicable EPA approved or established TMDL(s). To answer this question, refer to *www.epa.gov/npdes/stormwater/cgp* for state- and regional-specific TMDL information related to the construction general permit. You may also have to contact your EPA regional office or state agency. If there are no applicable TMDLs or no related requirements, please check the "yes" box in the NOI form.

Section VI. Endangered Species Information

Indicate for which criterion (i.e., A, B, C, D, E, or F) of the permit the applicant is eligible with regard to protection of federally listed endangered and threatened species, and designated critical habitat. See Part 1.3.C.6 and Appendix C of the permit. If you select criterion F, provide the permit tracking number of the operator under which you are certifying eligibility. The permit tracking number is the number assigned to the operator by the Storm Water Notice Processing Center after EPA acceptance of a complete NOI.

Section VII. Certification Information

All applications, including NOIs, must be signed as follows: *For a corporation:* By a responsible corporate officer. For the purpose of this Section, a responsible corporate officer means:

(i) a president, secretary, treasurer, or vice-president of the corporation in charge of a principal business function, or any other person who performs similar policy- or decision-making functions for the corporation, or (ii) the manager of one or more manufacturing, production, or operating facilities, provided, the manager is authorized to make management decisions which govern the operation of the regulated facility including having the explicit or implicit duty of making major capital investment recommendations, and initiating and directing other comprehensive measures to assure long-term environmental compliance with environmental laws and regulations; the manager can ensure that the necessary systems are established or actions taken to gather complete and accurate information for permit application requirements; and where authority to sign documents has been assigned or delegated to the manager in accordance with corporate procedures.

For a partnership or sole proprietorship: By a general partner or the proprietor, respectively; or

For a municipality, state, federal, or other public agency: By either a principal executive officer or ranking elected official. For purposes of this Part, a principal executive officer of a federal agency includes (i) the chief executive officer of the agency, or (ii) a senior executive officer having responsibility for the overall operations of a principal geographic unit of the agency (e.g., Regional Administrator of EPA). Include the name and title of the person signing the form and the date of signing. An unsigned or undated NOI form will not be considered eligible for permit coverage.

If the NOI was prepared by someone other than the certifier (for example, if the NOI was prepared by the facility SWPPP contact or a consultant for the certifier's signature), include the name, organization, phone number and email address of the NOI preparer.

Paperwork Reduction Act Notice

Public reporting burden for this application is estimated to average 3.7 hours. This estimate includes time for reviewing instructions, searching existing data sources, gathering and maintaining the data needed, and completing and reviewing the collection of information. An agency may not conduct or sponsor, and a person is not required to respond to, a collection of information unless it displays a currently valid OMB control number. Send comments regarding the burden estimate, any other aspect of the collection of information, or suggestions for improving this form, including any suggestions which may increase or reduce this burden to: Chief, Information Policy Branch 2136, U.S. Environmental Protection, Agency, 1200 Pennsylvania Avenue, NW, Washington, D.C. 20460. Include the OMB control number on any correspondence. Do not send the completed form to this address. **Visit this website for mailing instructions:** *www.epa.gov/npdes/stormwater/mail*.

APPENDIX E: INSPECTION REPORTS

APPENDIX E: Stormwater Construction Site Inspection Report

General Information			
Project Name	New Commissary Facility, New London, CT		
NPDES Tracking No.		**Location**	
Date of Inspection		**Start/End Time**	
Inspector's Name(s)			
Inspector's Title(s)			
Inspector's Contact Information			
Inspector's Qualifications			
Describe present phase of construction			
Type of Inspection: ❑ Regular ❑ Pre-storm event ❑ During storm event ❑ Post-storm event			
Weather Information			
Has there been a storm event since the last inspection? ❑Yes ❑No **If yes, provide:** Storm Start Date & Time: Storm Duration (hrs): Approximate Amount of Precipitation (in):			
Weather at time of this inspection? ❑ Clear ❑Cloudy ❑ Rain ❑ Sleet ❑ Fog ❑ Snowing ❑ High Winds ❑ Other: Temperature:			
Have any discharges occurred since the last inspection? ❑Yes ❑No **If yes, describe:**			
Are there any discharges at the time of inspection? ❑Yes ❑No **If yes, describe:**			

Site-specific BMPs

- *Number the structural and non-structural BMPs identified in your SWPPP on your site map and list them below (add as many BMPs as necessary). Carry a copy of the numbered site map with you during your inspections. This list will ensure that you are inspecting all required BMPs at your site.*
- *Describe corrective actions initiated, date completed, and note the person that completed the work in the Corrective Action Log.*

	BMP	BMP Installed?	BMP Maintenance Required?	Corrective Action Needed and Notes
1		❑Yes ❑No	❑Yes ❑No	
2		❑Yes ❑No	❑Yes ❑No	
3		❑Yes ❑No	❑Yes ❑No	
4		❑Yes ❑No	❑Yes ❑No	
5		❑Yes ❑No	❑Yes ❑No	
6		❑Yes ❑No	❑Yes ❑No	
7		❑Yes ❑No	❑Yes ❑No	
8		❑Yes ❑No	❑Yes ❑No	
9		❑Yes ❑No	❑Yes ❑No	
10		❑Yes ❑No	❑Yes ❑No	
11		❑Yes ❑No	❑Yes ❑No	
12		❑Yes ❑No	❑Yes ❑No	
13		❑Yes ❑No	❑Yes ❑No	
14		❑Yes ❑No	❑Yes ❑No	
15		❑Yes ❑No	❑Yes ❑No	
16		❑Yes ❑No	❑Yes ❑No	
17		❑Yes ❑No	❑Yes ❑No	
18		❑Yes ❑No	❑Yes ❑No	
19		❑Yes ❑No	❑Yes ❑No	
20		❑Yes ❑No	❑Yes ❑No	

Overall Site Issues

Below are some general site issues that should be assessed during inspections. Customize this list as needed for conditions at your site.

	BMP/activity	Implemented?	Maintenance Required?	Corrective Action Needed and Notes
1	Are all slopes and disturbed areas not actively being worked properly stabilized?	❑Yes ❑No	❑Yes ❑No	
2	Are natural resource areas (e.g., streams, wetlands, mature trees, etc.) protected with barriers or similar BMPs?	❑Yes ❑No	❑Yes ❑No	
3	Are perimeter controls and sediment barriers adequately installed (keyed into substrate) and maintained?	❑Yes ❑No	❑Yes ❑No	
4	Are discharge points and receiving waters free of any sediment deposits?	❑Yes ❑No	❑Yes ❑No	
5	Are storm drain inlets properly protected?	❑Yes ❑No	❑Yes ❑No	
6	Is the construction exit preventing sediment from being tracked into the street?	❑Yes ❑No	❑Yes ❑No	
7	Is trash/litter from work areas collected and placed in covered dumpsters?	❑Yes ❑No	❑Yes ❑No	
8	Are washout facilities (e.g., paint, stucco, concrete) available, clearly marked, and maintained?	❑Yes ❑No	❑Yes ❑No	
9	Are vehicle and equipment fueling, cleaning, and maintenance areas free of spills, leaks, or any other deleterious material?	❑Yes ❑No	❑Yes ❑No	

	BMP/activity	Implemented?	Maintenance Required?	Corrective Action Needed and Notes
10	Are materials that are potential stormwater contaminants stored inside or under cover?	❑Yes ❑No	❑Yes ❑No	
11	Are non-stormwater discharges (e.g., wash water, dewatering) properly controlled?	❑Yes ❑No	❑Yes ❑No	
12	(Other)	❑Yes ❑No	❑Yes ❑No	

Non-Compliance

Describe any incidents of non-compliance not described above:

CERTIFICATION STATEMENT

"I certify under penalty of law that this document and all attachments were prepared under my direction or supervision in accordance with a system designed to assure that qualified personnel properly gathered and evaluated the information submitted. Based on my inquiry of the person or persons who manage the system, or those persons directly responsible for gathering the information, the information submitted is, to the best of my knowledge and belief, true, accurate, and complete. I am aware that there are significant penalties for submitting false information, including the possibility of fine and imprisonment for knowing violations."

Print name and title: _____

Signature:_____ **Date:**_____

APPENDIX F: CORRECTIVE ACTION LOG

APPENDIX F: Corrective Action Log

Project Name: **New Commissary Facility, New London, CT**
SWPPP Contact:

Inspection Date	Inspector Name(s)	Description of BMP Deficiency	Corrective Action Needed (including planned date/responsible person)	Date Action Taken/Responsible Person

APPENDIX G: LOG OF CHANGES AND UPDATES TO SWPPP

APPENDIX G: SWPPP Amendment Log

Project Name: **New Commissary Facility, New London, CT**
SWPPP Contact:

Amendment No.	Description of the Amendment	Date of Amendment	Amendment Prepared by [Name(s) and Title]

APPENDIX H: SUBCONTRACTOR CERTIFICATIONS/AGREEMENTS

APPENDIX H: Subcontractor Certifications/Agreements

SUBCONTRACTOR CERTIFICATION
STORMWATER POLLUTION PREVENTION PLAN

Project Number: _____

Project Title: _____

Operator(s): _____

As a subcontractor, you are required to comply with the Stormwater Pollution Prevention Plan (SWPPP) for any work that you perform on-site. Any person or group who violates any condition of the SWPPP may be subject to substantial penalties or loss of contract. You are encouraged to advice each of your employees working on this project of the requirements of the SWPPP. A copy of the SWPPP is available for your review at the office trailer.

Each subcontractor engaged in activities at the construction site that could impact stormwater must be identified and sign the following certification statement:

I certify under the penalty of law that I have read and understand the terms and conditions of the SWPPP for the above designated project and agree to follow the BMPs and practices described in the SWPPP.

This certification is hereby signed in reference to the above named project:

Company: _____

Address: _____

Telephone Number: _____

Type of construction service to be provided: _____

_____

_____

Signature: _____

Title: _____

Date: _____

APPENDIX I: GRADING AND STABILIZATION ACTIVITIES LOG

APPENDIX I: Grading and Stabilization Activities Log

Project Name: **New Commissary Facility, New London, CT**
SWPPP Contact:

Date Grading Activity Initiated	Description of Grading Activity	Date Grading Activity Ceased (Indicate Temporary or Permanent)	Date When Stabilization Measures are Initiated	Description of Stabilization Measure and Location

APPENDIX J: SWPPP TRAINING LOG

APPENDIX J: SWPPP Training Log

Stormwater Pollution Prevention Training Log

Project Name:

Project Location:

Instructor's Name(s):

Instructor's Title(s):

Course Location: _____ Date: _____

Course Length (hours): _____

Stormwater Training Topic: *(check as appropriate)*

- ❑ **Erosion Control BMPs**
- ❑ **Sediment Control BMPs**
- ❑ **Non-Stormwater BMPs**
- ❑ **Emergency Procedures**
- ❑ **Good Housekeeping BMPs**

Specific Training objective: _____

_____

Attendee Roster: *(attach additional pages as necessary)*

No.	Name of Attendee	Company
1		
2		
3		
4		
5		
6		
7		
8		
9		
10		

APPENDIX K: DELEGATION OF AUTHORITY FORM

APPENDIX K: Delegation of Authority Form

Delegation of Authority

I, _____ (name), hereby designate the person or specifically described position below to be a duly authorized representative for the purpose of overseeing compliance with environmental requirements, including the Construction General Permit, at the **New Commissary Facility, New London** construction site. The designee is authorized to sign any reports, stormwater pollution prevention plans and all other documents required by the permit.

_____ (name of person or position)
_____ (company)
_____ (address)
_____ (city, state, zip)
_____ (phone)

By signing this authorization, 1confirm that I meet the requirements to make such a designation as set forth in Appendix G, Subsection 1l.A of EPA's Construction General Permit (CGP), and that the designee above meets the definition of a "duly authorized representative" as set forth in Appendix G, Subsection 11.B (1-3).

1certify under penalty of law that this document and all attachments were prepared under my direction or supervision in accordance with a system designed to assure that qualified personnel properly gathered and evaluated the information submitted. Based on my inquiry of the person or persons who manage the system, or those persons directly responsible for gathering the information, the information submitted is, to the best of my knowledge and belief, true, accurate, and complete. I am aware that there are significant penalties for submitting false information, including the possibility of fine and imprisonment for knowing violations.

Name: _____

Company: _____

Title: _____

Signature: _____

Date: _____

APPENDIX L: ENDANGERED SPECIES AND HISTORIC PRESERVATION DOCUMENTATION

APPENDIX M: INSPECTOR'S QUALIFICATIONS