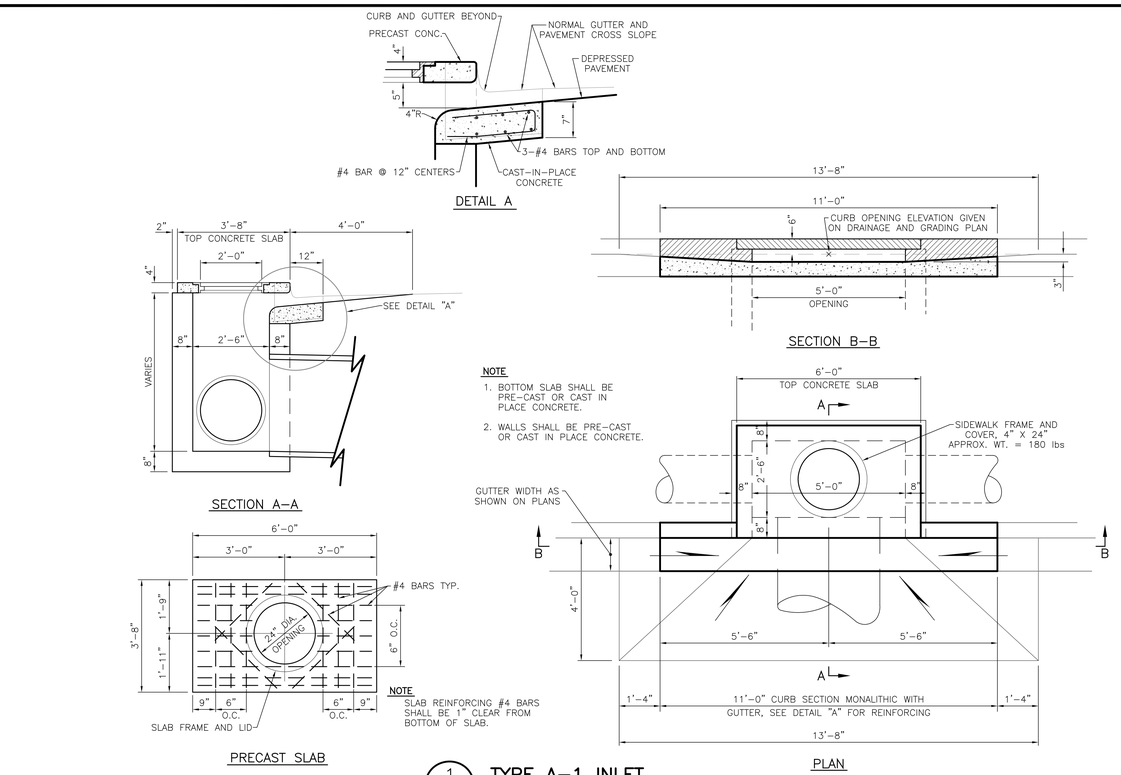

1 TYPE A-1 INLET
C6.1 | C4.2 NOT TO SCALE

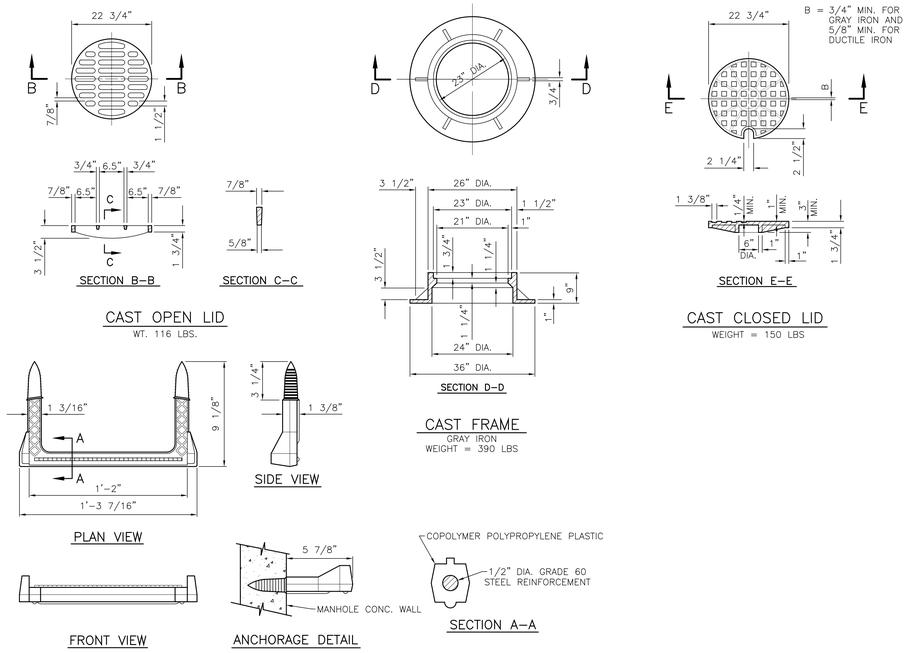

2 FRAME AND LIDS
C6.1 | C4.2 NOT TO SCALE

NOTES

1. * DIMENSION "C" FOR PRECAST REINFORCED CONCRETE SECTIONS MAY VARY FROM THE DIMENSIONS GIVEN TO PLUS 6".
2. ** THE REINFORCED PLASTIC STEPS AS DETAILED HEREIN ARE TYPICAL. STEPS OF OTHER DESIGN AND MATERIAL THAT WILL CONFORM TO THE MINIMUM REQUIREMENTS OF THE STEPS SHOWN, MAY BE USED WHEN APPROVED BY THE ENGINEER.
3. STEPS SHALL BE EMBEDDED INTO THE WALL A MINIMUM OF 3". STEPS SHALL NOT BE EXTENDED ON THE OUTSIDE.

PRECAST REINFORCED CONCRETE SECTION		
D	4'-0"	5'-0"
C	2'-6"	3'-9"
T	4"	5"

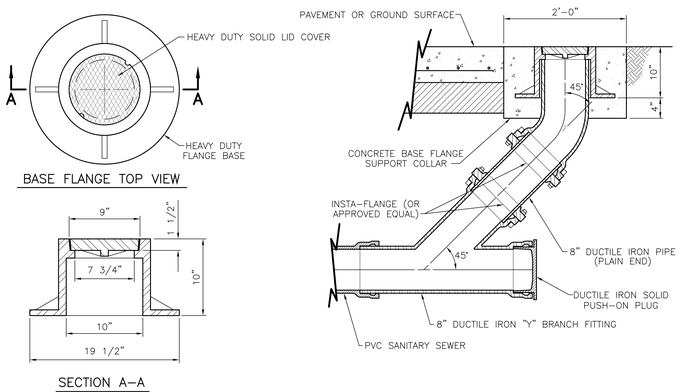

3 CLEAN-OUT
C6.1 | C4.2 NOT TO SCALE

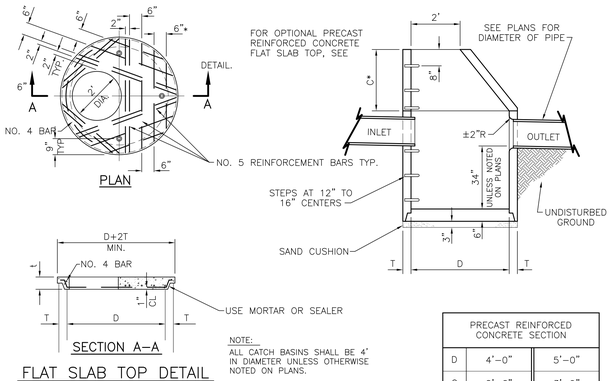

NOTE:
ALL CATCH BASINS SHALL BE 4' IN DIAMETER UNLESS OTHERWISE NOTED ON PLANS.

PRECAST REINFORCED CONCRETE SECTION		
D	4'-0"	5'-0"
C	2'-6"	3'-9"
T	4"	5"
t	6"	8"

4 CATCH BASIN
C6.1 | C4.2 NOT TO SCALE

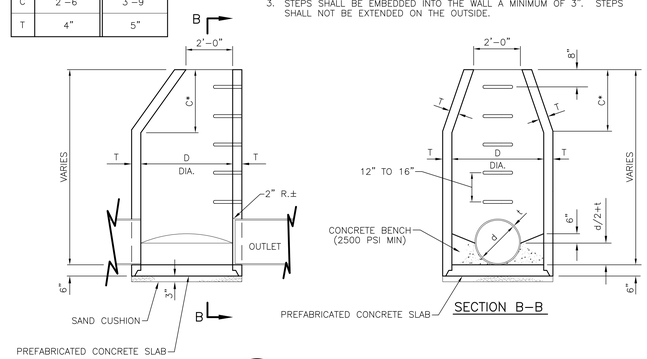

5 MANHOLE
C6.1 | C4.2 NOT TO SCALE

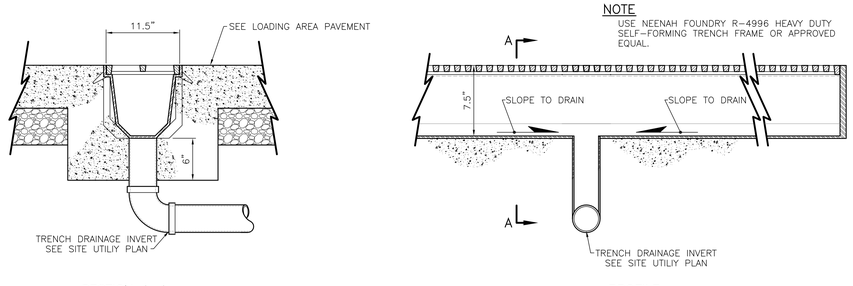

7 TRENCH DRAIN - BOTTOM OUTLET
C6.1 | C4.2 NOT TO SCALE

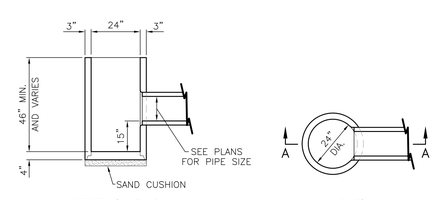

8 2' DIA. CATCH BASIN
C6.1 | C4.2 NOT TO SCALE

SYM.	D.O. NO.	ACTION	DATE	DESCRIPTION OF REVISION
			27 JUN 2012	AMENDMENT 0001

DEFENSE COMMISSARY AGENCY
DeCA LOGISTICS AND ENGINEERING GROUP
FORT LEE, VIRGINIA
LACKLAND AFB, TEXAS

DESIGNED BY:
DRAWN BY:
REVIEWED BY:
SUBMITTED BY:
ENGINEER:

DESIGN/BUILD NEW COMMISSARY

SITE DETAILS

MAXWELL A.F.B. - GUNTER ANNEX, ALABAMA

SOL. NO. HDEC03-12-R-0003 DATE: 27 JUN 2012
PROJECT NO. DE04MP05
DRAWING NUMBER SHEET NO. OF
SEQUENCE NO. C4.2