DESIGN / BUILD RFP

NEW COMMISSARY FACILITY

GUNTER ANNEX, MAXWELL AFB, ALABAMA

DECA PROJECT NO. : DE09MP05

DEFENSE COMMISSARY AGENCY

DIRECTORATE OF PERFORMANCE AND POLICY

FACILITIES PROGRAMMING AND PLANNING DIVISION

Fort Lee, Virginia

FACILITIES CONSTRUCTION AND SUSTAINMENT DIVISION

Lackland AFB, Texas

INDEX OF DRAWINGS

GENERAL

G1.1 TITLE SHEET & INDEX OF DRAWINGS

ARCHITECTURAL

A-1 FLOOR PLAN AND EQUIPMENT SCHEDULE
A-2 EXTERIOR ELEVATIONS AND BUILDING SECTION
A-3 EXTERIOR RENDERING

CIVIL

C0.1 TOPOGRAPHIC SURVEY
C1.1 EROSION AND SEDIMENT CONTROL PLAN STAGE I
C1.2 EROSION AND SEDIMENT CONTROL PLAN STAGE II
C1.3 EROSION AND SEDIMENT CONTROL PLAN STAGE III
C1.4 EROSION AND SEDIMENT CONTROL PLAN STAGE IV
C1.5 SEDIMENT AND EROSION CONTROL DETAILS
C2.1 SITE DEMOLITION PLAN
C2.2 SITE STAGING PLAN STAGE I
C2.3 SITE STAGING PLAN STAGE II
C2.4 SITE STAGING PLAN STAGE III
C2.5 SITE STAGING PLAN STAGE IV
C3.1 SITE LAYOUT PLAN
C4.1 SITE DETAILS
C4.2 SITE DETAILS
C4.3 SITE DETAILS
C4.4 SITE DETAILS
C4.5 SITE DETAILS
C4.6 SITE DETAILS
C5.1 SITE DRAINAGE AND GRADING PLAN
C6.1 SITE UTILITY PLAN
C6.2 SITE UTILITY PROFILES
L1.1 SITE LANDSCAPE PLAN
L1.2 SITE LANDSCAPE DETAILS

GUNTER ANNEX

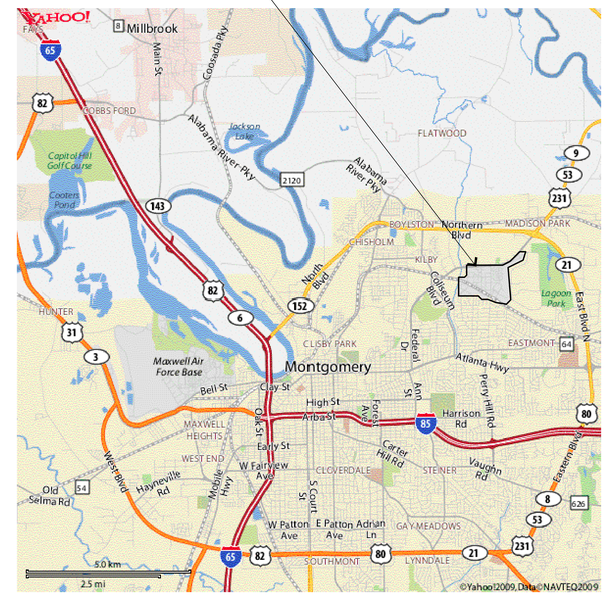

LOCATION MAP

COMMISSARY SITE

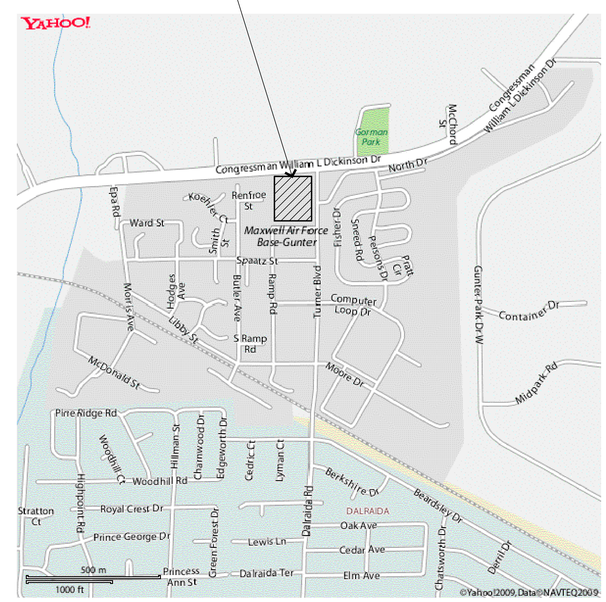

VICINITY MAP

NORTH

SYM.	D.O. NO.	ACTION	DATE	DESCRIPTION OF REVISION

DEFENSE COMMISSARY AGENCY
DIRECTORATE OF PERFORMANCE & POLICY
FORT LEE, VIRGINIA
LACKLAND AFB, TEXAS

DESIGNED BY:
DRAWN BY:
REVIEWED BY:

DESIGN / BUILD
NEW COMMISSARY
TITLE SHEET & INDEX OF DRAWINGS

MAXWELL AFB – GUNTER ANNEX, ALABAMA

SUBMITTED BY:
ENGINEER:

SOL. NO.
DATE: 01 AUG 2011
PROJECT NO. DE09MP05
DRAWING NUMBER
SHEET NO. OF
SEQUENCE NO. G1.1

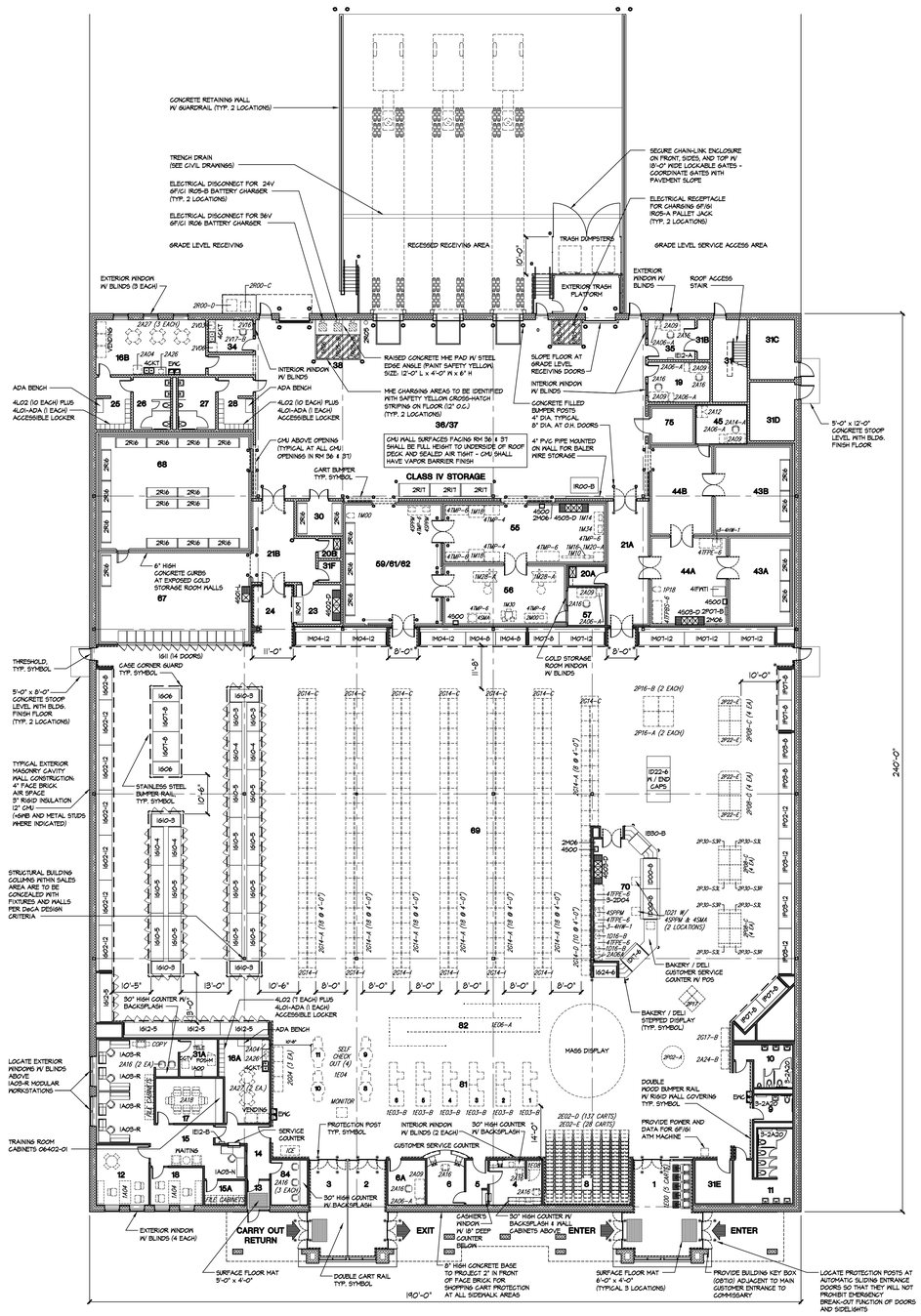

Gunter Annex is a Sales Band 4 Facility and will have two 8 CY trash dumpsters that are picked-up three times per week

MAXWELL AFB - GUNTER ANNEX EQUIPMENT PLAN

1/16"=1'-0"

GRAPHIC SCALE: 1/16" = 1'-0"
0 8' 16' 32'

NORTH

THIS CONCEPT FLOOR PLAN IS PROVIDED TO IDENTIFY COMMISSARY FUCTIONAL AND OPERATIONAL LAYOUT, AND QUANTITIES OF REQUIRED EQUIPMENT AND FURNISHINGS. DESIGN OF COMMISSARY SHALL COMPLY WITH REQUIREMENTS OF LATEST DeCA DESIGN CRITERIA ISSUED WITH THIS DESIGN/BUILD RFP.

CONFIGURATION OF CUSTOMER SERVICE AREA (RMS. 4, 6, & 6A) SHALL MATCH THAT SHOWN ON THIS DRAWING. ACTUAL DESIGN & CONSTRUCTION SHALL COMPLY WITH IS 28.00 DESIGN CRITERIA AND I32500-02, I32500-03, AND I32500-04 DESIGN STANDARD PLATES

ROOF ACCESS STAIR SHALL EXTEND TO ROOF LEVEL WITH INSULATED 3'-0" x 7'-0" STANDARD STEEL DOOR AT ROOF LEVEL FOR MAINTENANCE ACCESS

REFER TO DRAWING G3.1 FOR EXTERIOR SIDEWALKS AND PAVEMENTS

DESIGN OF PROJECT SHALL COMPLY W/ DeCA DESIGN CRITERIA, LATEST EDITION.

DeCA DESIGN CRITERIA CAN BE ACCESSED AT www.decafacilities.com/decacriteria/

SYMBOL LEGEND

- GWB ON METAL STUD PARTITION
- CMU (CONCRETE MASONRY UNIT)
- FACE BRICK
- COOLER / FREEZER WALL

EQUIPMENT NUMBER / EQUIPMENT — 0000 — CONTRACTOR FURNISHED / CONTRACTOR INSTALLED

EQUIPMENT NUMBER / EQUIPMENT — 0000 — GOVERNMENT FURNISHED / CONTRACTOR INSTALLED

EQUIPMENT NUMBER / EQUIPMENT — 0000 — GOVERNMENT FURNISHED / GOVERNMENT INSTALLED

EQUIPMENT LIST

BREAK ROOM EQUIPMENT

MARK	QTY.	LIN. FT.	DESCRIPTION
2A04	2		REFRIGERATOR-FREEZER, HOUSEHOLD
2A26	2		COMMERCIAL TYPE MICROWAVE OVENS
2A27	5		4 SEAT TABLE W/ CHAIRS
4CKT	2		KITCHEN COUNTER W/ SINK & WALL CABINETS ABOVE
4L01-ADA	3		LOCKER, CLOTHING, SINGLE TIER (ADA COMPLIANT)
4L02	21		LOCKER, CLOTHING, DOUBLE TIER (54 INDIVIDUAL 36" TALL LOCKERS)
-	3		LOCKER BENCH (ADA COMPLIANT) SECURE TO WALL

BAKERY / DELI EQUIPMENT

MARK	QTY.	LIN. FT.	DESCRIPTION
IB30-B	1		BAKERY DISPLAY, SELF-SERVICE, REFRIGERATED
ID00-B	2	16	CASE, DELI, REFRIGERATED, CLERK SERVICE, 8 FT
ID16-B	2		PANINI GRILL, DOUBLE
ID17-6	1	6	PREPARATION AND DISPLAY CASE FOR PIZZA AND SANDWICHES
ID21	2		DELI SLICER TABLE
ID22-6	1	12	CASE, WIDE ISLAND DISPLAY, SELF-CONTAINED W/ END DISPLAYS
IG24-6	1	6	MERCHANDISER, GRAB N' GO, SELF-CONTAINED, MULTI-DECK, 6 FT.
2A06A	1		FILE CABINET, 5 DRAWER, LETTER W/ LOCK (BLACK)
2M06	1		WALL MOUNT DRENCH HOSE
3-2D04	1		TAKE-A-NUMBER SYSTEM, DIGITAL
3-4HW-1	1		HAND WRAPPER, 1 ROLL, TABLE TOP MODEL
4SPPM	3		SCALE/PRINTER, PROGRAMMABLE, 30 LB., STAND-ALONE OR MASTER
4SM4	2		SLICER, MEAT, AUTOMATIC
4S00	1		HAND WASH SINK
4S03-D	1		SINK, THREE COMPARTMENT, SS
4TFPE-6	3		TABLE, FOOD PREPARATION, ENCLOSED BASE (30" W x 72" L x 36" H)

FRONT END EQUIPMENT

MARK	QTY.	LIN. FT.	DESCRIPTION
1A00	1		PAGING, INTERCOM, AND MUSIC SYSTEM
1A03-N	1		ADMINISTRATIVE WORK STATION WITHOUT OVERHEAD STORAGE
1A03-R	4		ADMINISTRATIVE WORK STATION
1A04	2		OFFICE SET, MANAGEMENT
1E00	5		CART, SHOPPING, HANDICAP, BATTERY
1E03-B	6		CHECKOUT COUNTER, MEDIUM COMMISSARY, POSM
1E04	1		SELF CHECKOUT QUADS
1E06-A	1		QUEUING SYSTEM, CHECKOUT, TRAFFIC CONTROL (27 STANCHIONS)
1E08	1		SAFE - 22 CU. FT. CAPACITY
1E12-A	1		KEY CONTROL CABINET, 20 KEY SETS
1E12-B	1		KEY CONTROL CABINET, 30 KEY SETS
2A06A	1		FILE CABINET, 5 DRAWER, LETTER W/ LOCK (BLACK)
2A09	1		DESK, STEEL, GENERAL OFFICE (BLACK)
2A16	9		CHAIR, TASK, ERGO WITHOUT ARMS
2A18	1		CONFERENCE TABLE WITH ROTARY CHAIRS
2A24-B	1		TROPHY DISPLAY CASE, 5 FT LONG, HORIZONTAL, LOW PROFILE
2E02-D	137		SHOPPING CART, WIRE BASKET, NESTING
2E02-E	28		SHOPPING CART, WIRE BASKET, NESTING (SELF-CHECKOUT, SCO)
3-2A20	3		BABY CHANGING STATION

GROCERY EQUIPMENT

MARK	QTY.	LIN. FT.	DESCRIPTION
IG02-8	1	8	CASE, DAIRY, MULTI-DECK, 8 FT
IG02-12	6	72	CASE, DAIRY, MULTI-DECK, 12 FT
IG06	2		CASE, FROZEN FOOD, WIDE ISLAND, END CAP
IG07-8	2	16	CASE, FROZEN FOOD, WIDE ISLAND, 8 FT
IG10-3	6	18 DRS	CASE, FROZEN FOOD, W/ 3 GLASS DOORS
IG10-4	4	16 DRS	CASE, FROZEN FOOD, W/ 4 GLASS DOORS
IG10-5	12	60 DRS	CASE, FROZEN FOOD, W/ 5 GLASS DOORS
IG11	14		REMOTE, DAIRY, REACH-IN DOORS, MILK/EGGS/JUICE
IG12-5	4	20 DRS	CASE, ICE CREAM, FROZEN FOODS, AND FROZEN JUICE W/ 5 GLASS DOORS
2G04	3		MERCHANDISER, CIGARETTE, METAL
2G14-A	116	928	SHELVING, ADJUSTABLE GONDOLA, CANTILEVER, ISLAND TYPE
2G14-C	7		CONTOURED END DISPLAY UNIT
2G14-D	10	40	SHELVING, ADJUSTABLE HALF-GONDOLA, CANTILEVER, WALL TYPE, 4 FT.
2G14-I	6		END PLATFORM DISPLAY DECK, FREESTANDING SLOPED DISPLAY
2G17-B	1		NEW PRODUCT DISPLAY CASE, LOW PROFILE / HORIZONTAL, 5 FT LONG
4S01-L	1		SINK, 1 COMPARTMENT, SS, W / HOSE SPRAYER

MEAT DEPARTMENT EQUIPMENT

MARK	QTY.	LIN. FT.	DESCRIPTION
1M00	1		SCALE, PLATFORM
IM04-8	2	16	CASE, PREPACKAGED DELI, MULTI-DECK, 8 FT.
IM04-12	3	36	CASE, PREPACKAGED DELI, MULTI-DECK, 12 FT.
IM07-8	1	8	CASE, FRESH MEAT OR DELI, MULTI-DECK, 8 FT.
IM07-12	4	48	CASE, FRESH MEAT OR DELI, MULTI-DECK, 12 FT.
1M10	1		CONVEYOR, MEAT-LOAF, ELECTRIC
1M14	1		CHOPPER, MEAT, 8 LBS. PER MINUTE
1M16	2		MEAT MOLDER ATTACHMENT
1M18	2		MEAT SAW, BAND
1M20-A	1		MIXER, GRINDER, FLOOR MODEL, SINGLE HOPPER
1M28-A	2		SCALE/LABELER/WRAPPER SYSTEM, FULL-SIZE
1M30	1		SCALE AND PRINTER WITH 3 ROLL WRAPPER SYSTEM
1M34	1		MEAT TENDERIZER
2A06-A	1		FILE CABINET, VERTICAL, 5 DRAWER, LETTER SIZE
2A09	1		DESK, STEEL, GENERAL OFFICE (BLACK)
2A16	1		CHAIR, TASK, ERGO WITHOUT ARMS (NYLON / BLACK)
2M00	1		FAT ANALYZING KIT
2M06	1		WALL MOUNT DRENCH HOSE
4SM4	1		SLICER, MEAT, AUTOMATIC
4S00	2		HAND WASH SINK
4S03-D	1		SINK, 3 COMPARTMENT, SS
4SPPM	2		SCALE/PRINTER, PROGRAMMABLE, 30 LB., STAND-ALONE OR MASTER
4TMP-4	2		TABLE W/ CUTTING BOARD / UNDERSHELF (4'-0" LONG)
4TMP-6	6		TABLE W/ CUTTING BOARD / UNDERSHELF (6'-0" LONG)

PRODUCE EQUIPMENT

MARK	QTY.	LIN. FT.	DESCRIPTION
IP03-8	2	16	CASE, PRODUCE, REFRIGERATED, SINGLE-DECK, 8 FT
IP03-12	4	48	CASE, PRODUCE, REFRIGERATED, SINGLE-DECK, 12 FT
IP07-8	4	32	CASE, PRODUCE, PRE-CUT VEGETABLES, REFRIGERATED, 8 FT
1P18	1		SCALE, PLATFORM, MOBILE
2A06-A	1		FILE CABINET, VERTICAL, 5 DRAWER, LETTER SIZE
2A09	1		DESK, STEEL, GENERAL OFFICE (BLACK)
2A12	1		CABINET, STORAGE, DOUBLE DOORS, 36" W x 18" D
2A14-A	1		CHAIR, TASK, ERGO WITH ARMS, HIGH BACK (NYLON / BLACK)
2M06	1		WALL MOUNT DRENCH HOSE
2P02-A	1		FLORAL ROUND ISLAND DISPLAY
2P07-B	1		PRODUCE MISTING SYSTEM
2P08-C	16		TILT TOP TABLE, 48" L x 36" D EUROPEAN STYLE
2P16-A	2		ORCHARD BIN (FOR USE WITHOUT ICE)
2P16-B	2		ORCHARD BIN (FOR USE WITH ICE)
2P17	1		ORCHARD BIN SET (4 BINS)
2P22-E	4		END CAP, MOBILE, FOR EURO STYLE TABLE, 6 FT WIDE x 3 FT DEEP
2P30-S3L	4		DISPLAY, PRODUCE, END CAP, CRATE STYLE, 36" L x 12" D x 50" H
2P30-S3R	4		DISPLAY, PRODUCE, END CAP, CRATE STYLE, 36" L x 12" D x 50" H
3-4HW-1	1		HAND WRAPPER, 1 ROLL, TABLE TOP MODEL
4IFXT1	1		ICE FLAKER W/ ICE TRANSPORT SYSTEM & ONE PORTABLE STORAGE CART
4S00	1		HAND WASH SINK
4S03-D	1		SINK, 3 COMPARTMENT, SS
4TFPE-6	1		TABLE, FOOD PREPARATION, ENCLOSED BASE (6'-0" LONG)
4TFPBS-6	1		TABLE, FOOD PREPARATION W/ BACKSPLASH & UNDERSHELF (6'-0" LONG)

ROOM INDEX

		AREA	SIZE
1	ENTRY VESTIBULE	464 SF	16'-0"x25'-11"
2	EXIT VESTIBULE	230 SF	7'-10"x25'-11"
3	CARRY-OUT RETURN VESTIBULE	230 SF	7'-10"x25'-11"
4	CASHIER'S OFFICE	168 SF	14'-0"x12'-0"
5	CASH COUNTING	70 SF	5'-10" x 12'-0"
6	CUSTOMER SERVICE	124 SF	10'-0"x12'-5"
6A	CUSTOMER SERVICE MANAGER	120 SF	10'-0"x12'-0"
8	CART STORAGE	293 SF	23'-7"x12'-5"
9	FAMILY RESTROOM	73 SF	10'-5"x7'-0"
10	CUSTOMER RESTROOM (MEN)	141 SF	10'-5"x11'-5"
11	CUSTOMER RESTROOM (WOMEN)	263 SF	15'-10"x20'-0"
12	STORE DIRECTOR	224 SF	14'-0"x16'-0"
13	ADMINISTRATIVE ENTRY VESTIBULE	46 SF	6'-0"x7'-9"
14	ADMINISTRATIVE CORRIDOR	130 SF	-----
15	ADMINISTRATIVE AREA	760 SF	-----
15A	SECRETARY STORAGE	72 SF	11'-0"x6'-6"
16A	EMPLOYEE BREAKROOM	285 SF	12'-0"x22'-5"
16B	EMPLOYEE BREAKROOM	430 SF	29'-4"x14'-8"
17	TRAINING ROOM	216 SF	18'-0"x12'-0"
18	STORE ADMINISTRATOR	140 SF	14'-0"x10'-0"
19	GROCERY MANAGER	176 SF	16'-6"x10'-8"
20A	JANITOR'S CLOSET	50 SF	9'-8"x5'-2"
20B	JANITOR'S CLOSET	32 SF	6'-0"x5'-4"
21A	VESTIBULE (RECEIVING/STAGING TO SALES AREA)	378 SF	11'-4"x33'-3"
21B	VESTIBULE (RECEIVING/STAGING TO SALES AREA)	314 SF	-----
23	DAMAGED MERCHANDISE	124 SF	11'-10"x10'-6"
24	DAMAGED MERCHANDISE SALES NICHE	176 SF	11'-0"x16'-0"
25	LOCKER ROOM (WOMEN)	131 SF	9'-4"x14'-0"
26	EMPLOYEE RESTROOM (WOMEN)	140 SF	10'-0"x14'-0"
27	EMPOYEE RESTROOM (MEN)	140 SF	10'-0"x14'-0"
28	LOCKER ROOM (MEN)	131 SF	9'-4"x14'-0"
30	CONTRACT STOCKER STORAGE	115 SF	12'-4"x9'-4"
31	STAIRWELL	205 SF	9'-4"x22'-0"
31A	COMMUNICATIONS ROOM (CISIC)	100 SF	10'-0"x10'-0"
31B	COMMUNICATIONS CLOSET (CISIC)	36 SF	3'-4"x10'-8"
31C	SPRINKLER ROOM	192 SF	12'-0"x16'-0"
31D	ELECTRICAL ROOM	188 SF	12'-0"x15'-8"
31E	ELECTRICAL ROOM	115 SF	9'-10"x11'-8"
31F	ELECTRICAL ROOM	34 SF	6'-0"x5'-8"
34	MEDICAL FOOD INSPECTION OFFICE	104 SF	12'-0"x8'-8"
35	RECEIVING MANAGER OFFICE	133 SF	12'-6"x10'-8"
36/37	RECEIVING AREA / STAGING AREA	4,914 SF	104'-2"x47'-9"
38	MHE CHARGING AREA	128 SF	12'-0"x10'-8"
43A	PRODUCE CHILLED STORAGE	348 SF	16'-10"x23'-8"
43B	PRODUCE CHILLED STORAGE (GAS)	444 SF	20'-8"x24'-0"
44A	PRODUCE PROCESSING	485 SF	20'-6"x23'-8"
44B	PRODUCE AMBIENT STORAGE	399 SF	16'-8"x24'-0"
45	PRODUCE MANAGER	140 SF	13'-6"x10'-4"
55	MEAT PROCESSING	642 SF	43'-3"x16'-0"
56	MEAT WRAPPING	528 SF	32'-8"x16'-2"
57	MEAT MANAGER	102 SF	10'-0"x10'-2"
59/61/62	MEAT CHILL STORAGE / PREPACKAGED MEAT CHILL STORAGE / POULTRY CHILL STORAGE	855 SF	26'-4"x32'-6"
67	DAIRY STORAGE	990 SF	40'-5"x24'-6"
68	FROZEN FOOD STORAGE	1,231 SF	40'-3"x30'-7"
69	SALES AREA	21,377 SF	-----
70	DELI SERVICE AREA	660 SF	-----
75	BAKERY CHILL STORAGE	117 SF	11'-8"x10'-0"
81	CHECKOUT	2,171 SF	-----
82	SINGLE LINE QUEUING	810 SF	-----
84	VENDORS ROOM	116 SF	9'-8"x12'-0"

EQUIPMENT LIST (CONTINUED)

STAGING/RECEIVING EQUIPMENT

MARK	QTY.	LIN. FT.	DESCRIPTION
IR00-B	1		BALER, CARDBOARD, VERTICAL, MEDIUM
IR05-B	2		PALLET JACK, ELECTRIC, WALKIE STACKER, 3000 LB. CAPACITY
IR06	1		FORKLIFT, 4000 LB CAPACITY
IR09	1		DAMAGED MERCHANDISE UNIT
2A06-A	1		FILE CABINET, VERTICAL, 5 DRAWER, LETTER SIZE
2A09	1		DESK, STEEL, GENERAL OFFICE (BLACK)
2A16	1		CHAIR, TASK, ERGO WITHOUT ARMS (NYLON / BLACK)
2R00-C	1		CABINET, STORAGE, FLAMMABLE LIQUIDS, 60 GALLON CAPACITY
2R00-D	1		CABINET, STORAGE, LP CYLINDER, 5-10 CYLINDER CAPACITY
2R05	1		EYE/FACE AND BODY SPRAY
2R16	24		RACK, STORAGE, GALVANIZED, 46" H x 30" D x 96" W
2R17	3		STORAGE RACK, PALLET, PAINTED, 96" H X 42" D X 96" W
4S02-D	1		SINK, TWO COMPARTMENT, SS, W/ DISPOSAL

MEDICAL FOOD INSPECTION

MARK	QTY.	LIN. FT.	DESCRIPTION
2V03	1		COUNTERTOP MICROWAVE OVEN
2V06	1		REFRIGERATOR / FREEZER, 15 CU. FT.
2V16	1		DESK, STEEL, GENERAL OFFICE
2V17-B	1		CHAIR, TASK, ERGO WITH ARMS, LOW BACK
4CKT	1		KITCHEN COUNTER W/ SINK & WALL CABINETS ABOVE

AREA CALCULATION

BUILDING	**46,183 S.F.**
CANOPY @ HALF SCOPE	**838 S.F.**
TOTAL BUILDING	**47,021 S.F.**
IN ACCORDANCE WITH DeCA DESIGN CRITERIA, MECHANICAL EQUIPMENT ROOMS ARE NOT INCLUDED IN AUTHORIZED BUILDING AREA	
MECHANICAL EQUIPMENT ROOMS	**-870 S.F.**
ACTUAL BUILDING AREA	**46,151 S.F.**
OVERALL SALES AREA	**24,694 S.F.**

SYM.	D.O. NO.	ACTION	DATE	DESCRIPTION OF REVISION

DEFENSE COMMISSARY AGENCY
DeCA LOGISTICS AND ENGINEERING GROUP
FORT LEE, VIRGINIA
LACKLAND AFB, TEXAS

DESIGNED BY:
DRAWN BY:
REVIEWED BY:
SUBMITTED BY:
ENGINEER:

DESIGN / BUILD NEW COMMISSARY

FLOOR PLAN AND EQUIPMENT SCHEDULE

MAXWELL AFB - GUNTER ANNEX, ALABAMA

SOL. NO. | DATE: 01 DEC 2011
PROJECT NO. DE0RMP05
DRAWING NUMBER | SHEET NO. OF | SEQUENCE NO. A-1

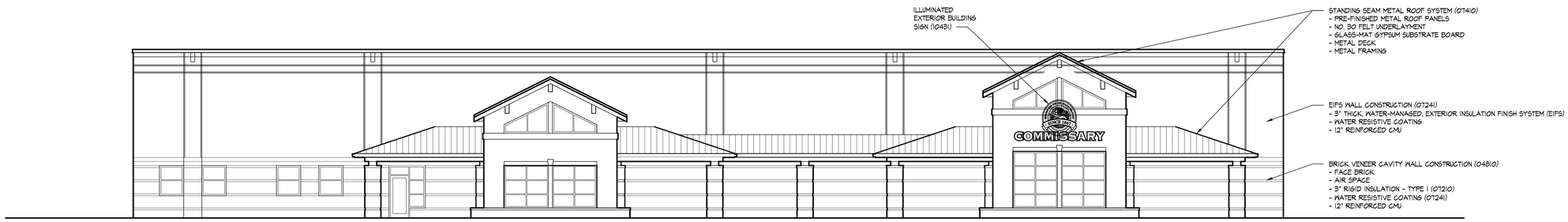

SOUTH ELEVATION

1/8"=1'-0"

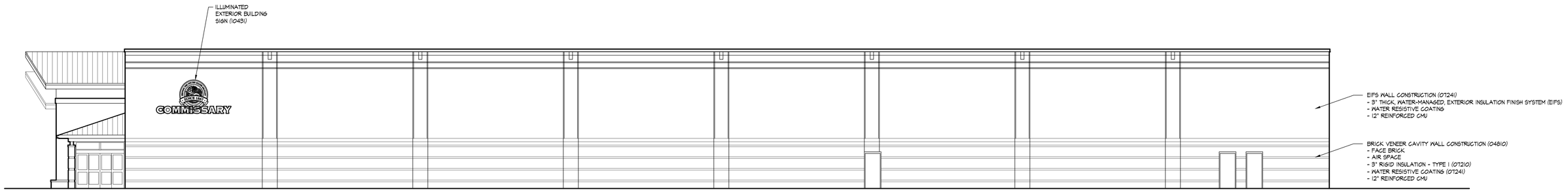

EAST ELEVATION

1/8"=1'-0"

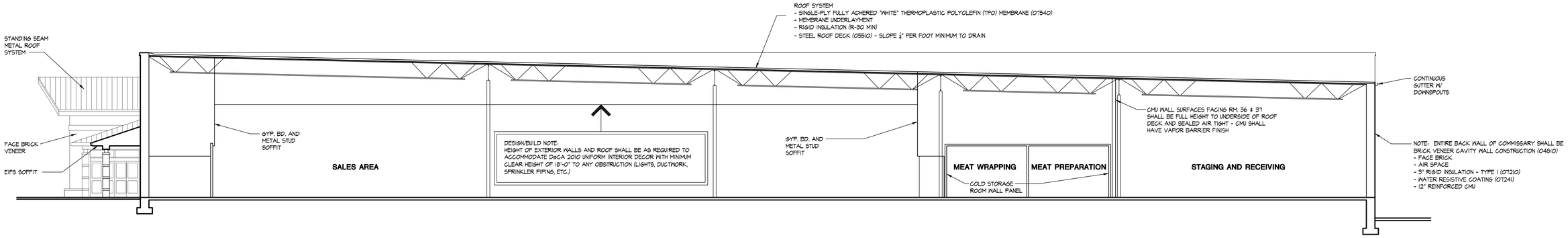

BUILDING SECTION

1/8"=1'-0"

GRAPHIC SCALE: 1/8" = 1'-0"
0 2' 4' 8' 16'

SYM.	D.O. NO.	ACTION	DATE	DESCRIPTION OF REVISION

DEFENSE COMMISSARY AGENCY
DIRECTORATE OF PERFORMANCE & POLICY
FORT LEE, VIRGINIA
LACKLAND AFB, TEXAS

DESIGNED BY:
DRAWN BY:
REVIEWED BY:

DESIGN / BUILD
NEW COMMISSARY

EXTERIOR ELEVATIONS
BUILDING SECTION

MAXWELL AFB – GUNTER ANNEX, ALABAMA

SUBMITTED BY:
ENGINEER:

SOL. NO.
DATE: 01 AUG 2011
PROJECT NO. DEOAMP05
DRAWING NUMBER
SHEET NO.
OF
SEQUENCE NO.
A-2

SYM.	D.O. NO.	ACTION	DATE	DESCRIPTION OF REVISION

DEFENSE COMMISSARY AGENCY
DIRECTORATE OF PERFORMANCE & POLICY
FORT LEE, VIRGINIA
LACKLAND AFB, TEXAS

DESIGNED BY:

DRAWN BY:

REVIEWED BY:

DESIGN / BUILD
NEW COMMISSARY

EXTERIOR RENDERING

MAXWELL AFB – GUNTER ANNEX, ALABAMA

SUBMITTED BY:

ENGINEER:

SOL. NO.

DATE: 01 AUG 2011

PROJECT NO. DECAMPOS

DRAWING NUMBER

SHEET NO.
OF

SEQUENCE NO.
A-3

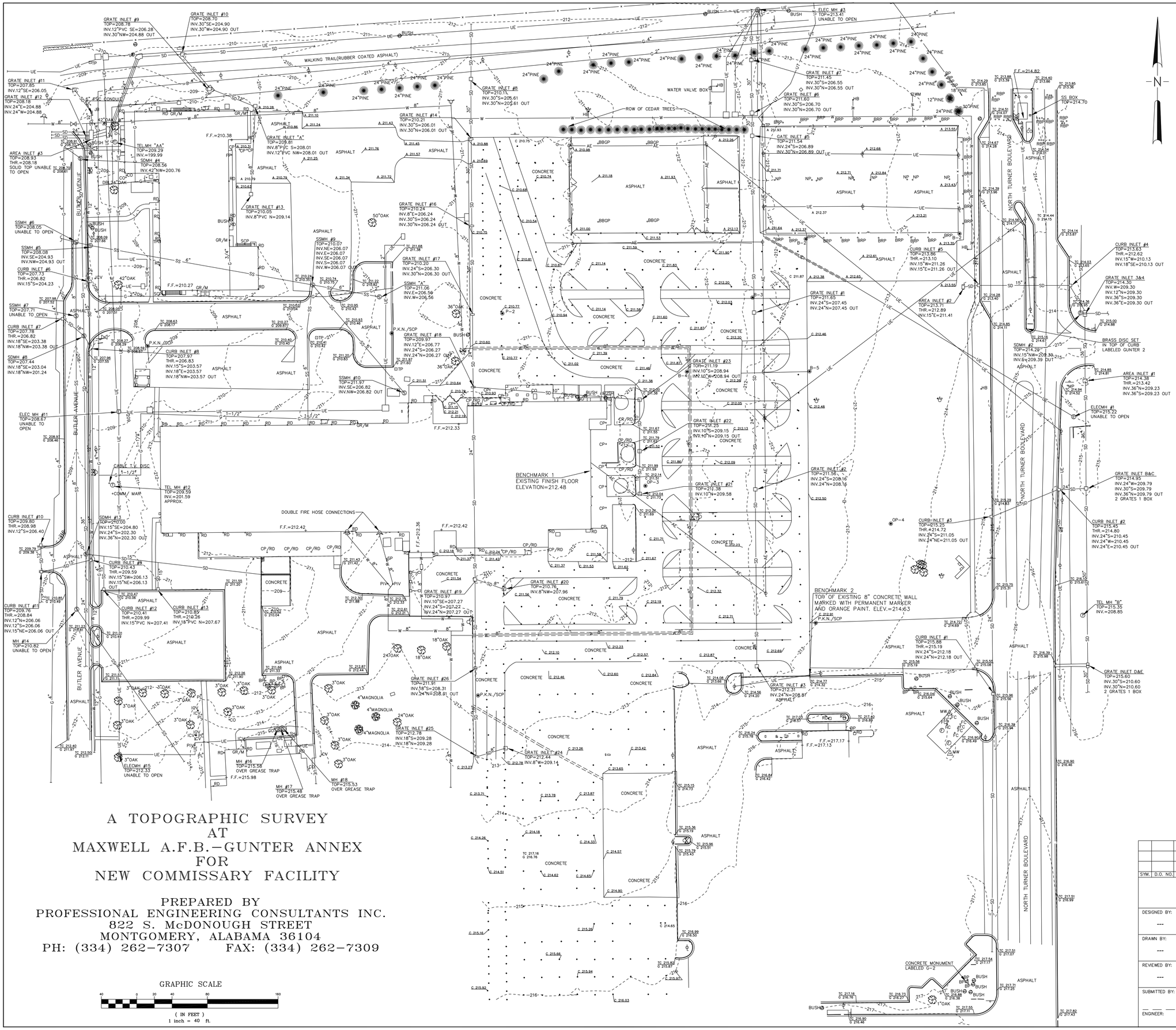

A TOPOGRAPHIC SURVEY AT MAXWELL A.F.B.–GUNTER ANNEX FOR NEW COMMISSARY FACILITY

PREPARED BY
PROFESSIONAL ENGINEERING CONSULTANTS INC.
822 S. McDONOUGH STREET
MONTGOMERY, ALABAMA 36104
PH: (334) 262-7307 FAX: (334) 262-7309

GRAPHIC SCALE

40 0 20 40 80 160

(IN FEET)
1 inch = 40 ft.

LEGEND

DESCRIPTION	SYMBOL
BUILDING	
CURB	
CURB & GUTTER	
CONCRETE PAVEMENT	
ASPHALT PAVEMENT	
SANITARY SEWER MANHOLE	Ⓢ
SANITARY SEWER LINE	—SS—
GAS REGULATOR/METER	oGR/M
GAS LINE	—G—
STORM MANHOLE	Ⓓ
GRATE INLET	□
AREA INLET	□
STORM DRAIN LINE	—SD—
FRENCH DRAIN LINE	—FD—
CLEAN-OUT	oCO
WATER LINE	—W—
ELECTRIC (AERIAL)	—AE—
ELECTRIC (UNDERGROUND)	—UE—
WATER METER	⊡WM
FIRE HYDRANT	
POWER POLE	
LIGHT POLE	
TELEPHONE PEDESTAL	⊡TP
GUY WIRE	
TRAFFIC SIGN	
BUMPER POST	oBP
COLUMN	□
FLOOD LIGHT	
BUSH	
BUSH ROW	
CREPE MYRTLE	
PINE TREE	
CEDAR TREE	
TREE	
FENCE	— x — x —
REMOVABLE BUMPER POST	oRBP
FLAG POLE	oFP
NET POLE	oNP
BRACE POLE	oBRP
BASKETBALL GOAL POST	oBBGP
IRRIGATION CONTROL VALVE	oICV
POST INDICATOR VALVE	oPIV
WATER SHUT OFF VALVE	
AIRCRAFT TIE DOWN ANCHORS	
BORING HOLE	
P.K. NAIL/SURVEY CONTROL POINT	PKN/SCP
ROOF DRAIN	oRD
FUEL MANHOLE	
FILLER CAP	oFC
MONITOR WELL	△MW
GAS VALVE	◁
CONTOUR	----216----
CANOPY POLE	oCP
JUNCTION BOX	□JB
SPOT ELEVATIONS	216.00

NOTES:

1. THE UNDERGROUND UTILITIES SHOWN HAVE BEEN LOCATED FROM FIELD SURVEY INFORMATION AND EXISTING DRAWINGS. THE SURVEYOR MAKES NO GUARANTEE THAT THE UNDERGROUND UTILITIES SHOWN COMPRISE ALL SUCH UTILITIES IN THE AREA, EITHER IN SERVICE OR ABANDONED. THE SURVEYOR FURTHER DOES NOT WARRANT THAT THE UNDERGROUND UTILITIES SHOWN ARE IN THE EXACT LOCATION INDICATED ALTHOUGH HE DOES CERTIFY THAT THEY ARE LOCATED AS ACCURATELY AS POSSIBLE FROM THE INFORMATION AVAILABLE. THE SURVEYOR HAS NOT PHYSICALLY LOCATED ALL OF THE UNDERGROUND UTILITIES.

SYM.	D.O. NO.	ACTION	DATE	DESCRIPTION OF REVISION
			-	-

DEFENSE COMMISSARY AGENCY
DIRECTORATE OF PERFORMANCE & POLICY
FORT LEE, VIRGINIA
LACKLAND AFB, TEXAS

DESIGNED BY: ---
DRAWN BY: ---
REVIEWED BY: ---

DESIGN/BUILD NEW COMMISSARY

TOPOGRAPHIC SURVEY

MAXWELL AFB – GUNTER ANNEX, ALABAMA

SUBMITTED BY:
ENGINEER:

SOL. NO.
DATE: 01 AUG 2011
PROJECT NO. DEO4MP05
DRAWING NUMBER
SHEET NO. OF .
SEQUENCE NO. C0.1

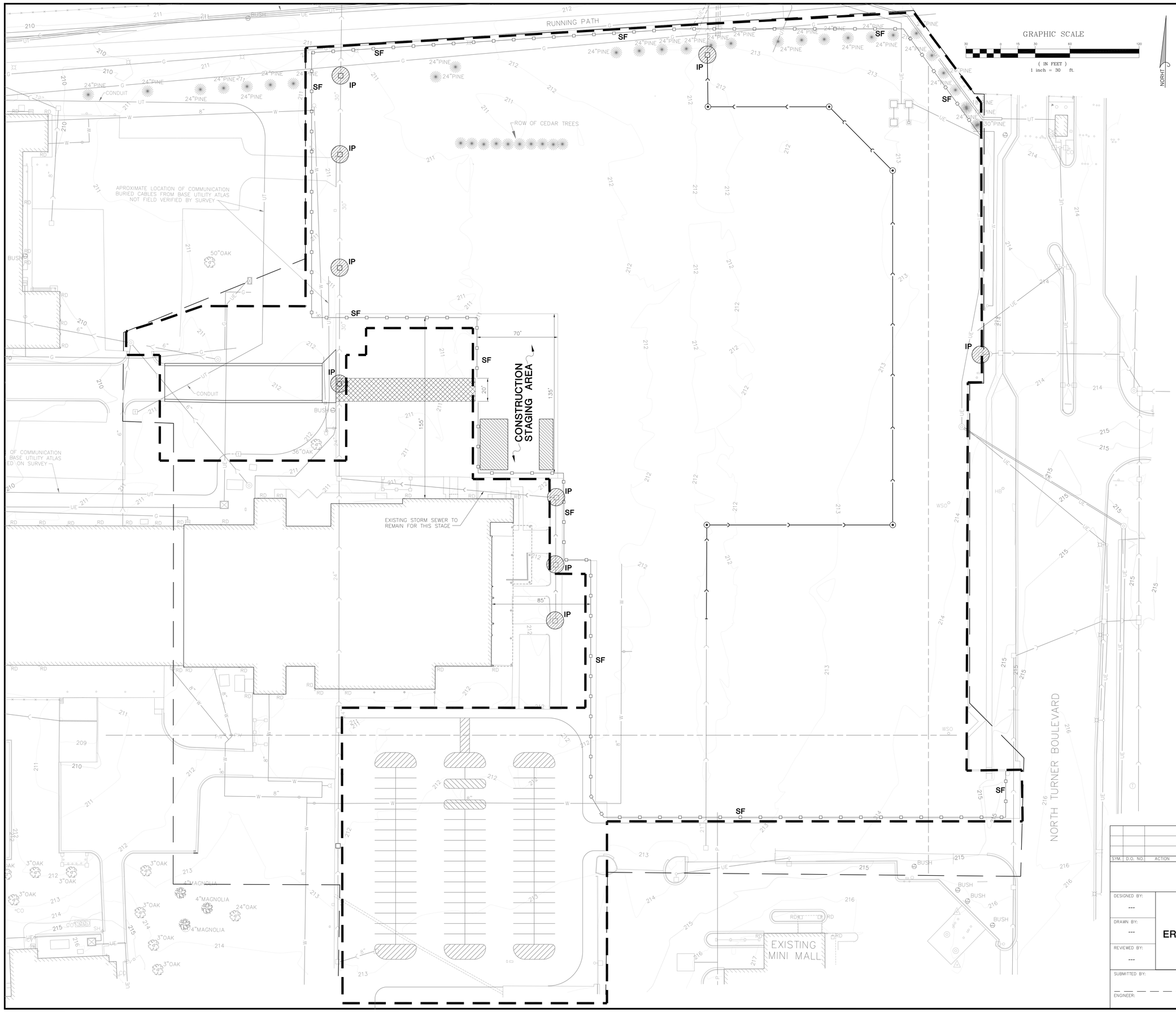

SYMBOL LEGEND

- EXISTING DRAINAGE STRUCTURE
- EXISTING MANHOLE
- EXISTING FIRE HYDRANT
- EXISTING VALVE BOX
- HB EXISTING HOSE BIB
- EXISTING METER BOX
- EXISTING LIGHT POLE
- EXISTING STORM SEWER
- EXISTING SANITARY SEWER
- W EXISTING WATER MAIN
- UE EXISTING UNDERGROUND ELECTRIC
- UE ABANDONED UNDERGROUND ELECTRIC
- UT EXISTING UNDERGROUND TELEPHONE
- UT ABANDONED UNDERGROUND TELEPHONE
- 212 EXISTING MINOR CONTOUR LINE
- 215 EXISTING MAJOR CONTOUR LINE
- EXISTING ELECTRIC BOX
- 18" OAK EXISTING DECIDUOUS TREE
- 24" PINE EXISTING CONIFER TREE
- STAGE I LIMITS OF CONSTRUCTION
- SF SILT FENCE, REF. DETAIL 1-C1.5
- CIP CULVERT INLET PROTECTION, REF. DETAIL 7-C1.5
- IP DROP INLET PROTECTION, REF. DETAIL 4-C1.5
- CONSTRUCTION EXIT PAD REF. DETAIL 2-C1.5
- NEW ITEM TO BE CONSTRUCTED DURING PHASE

SYM.	D.O. NO.	ACTION	DATE	DESCRIPTION OF REVISION

DEFENSE COMMISSARY AGENCY
DIRECTORATE OF PERFORMANCE & POLICY
FORT LEE, VIRGINIA
LACKLAND AFB, TEXAS

DESIGNED BY: ---
DRAWN BY: ---
REVIEWED BY: ---

DESIGN/BUILD NEW COMMISSARY

EROSION AND SEDIMENT CONTROL PLAN- STAGE I

MAXWELL A.F.B. – GUNTER ANNEX, ALABAMA

SUBMITTED BY:
ENGINEER:

SOL. NO.
DATE: 01 AUG 2011
PROJECT NO. DE0RMPC5
DRAWING NUMBER
SHEET NO. OF
SEQUENCE NO. C1.1

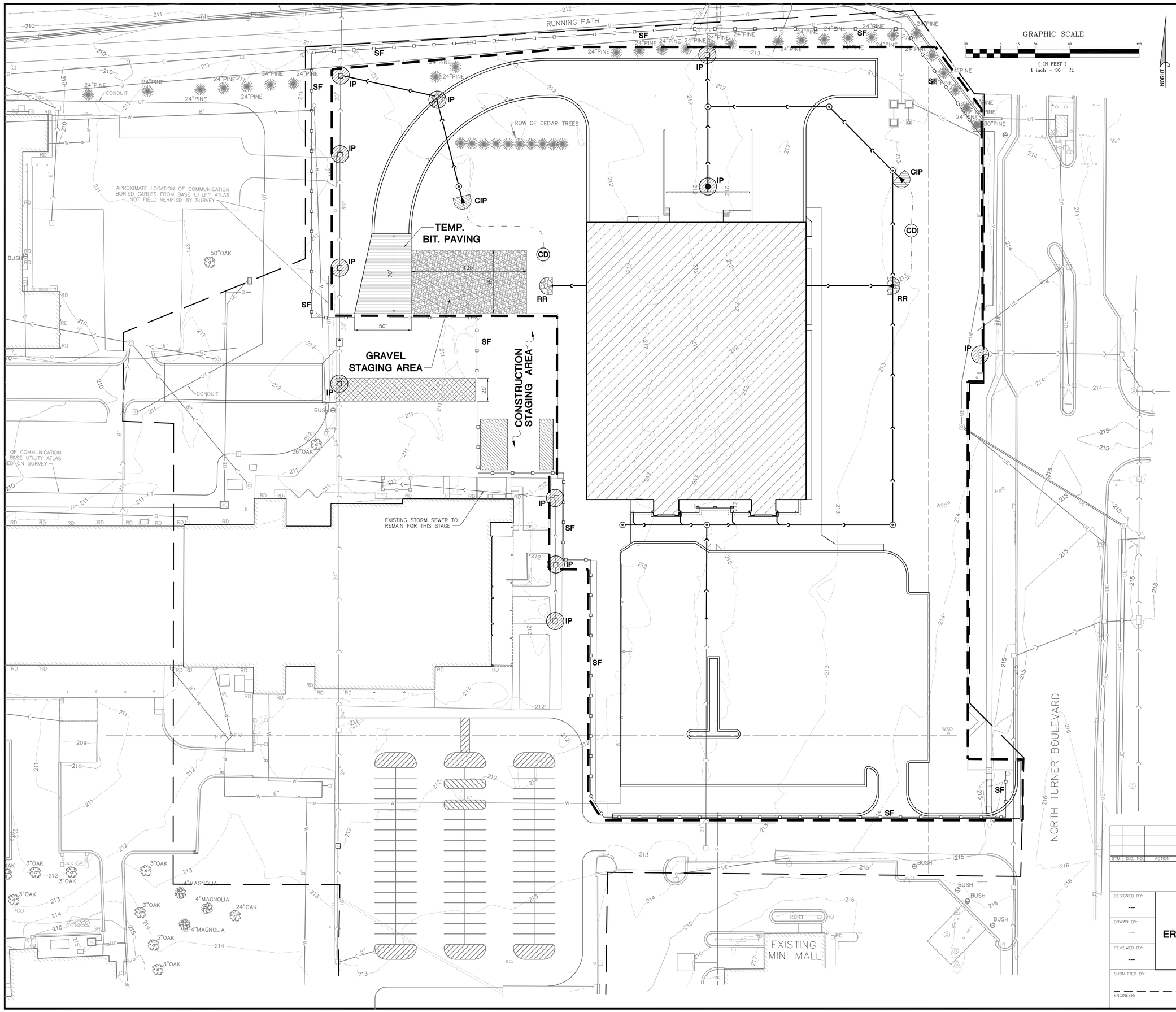

SYMBOL LEGEND

- EXISTING DRAINAGE STRUCTURE
- EXISTING MANHOLE
- EXISTING FIRE HYDRANT
- EXISTING VALVE BOX
- HB — EXISTING HOSE BIB
- EXISTING METER BOX
- EXISTING LIGHT POLE
- EXISTING STORM SEWER
- EXISTING SANITARY SEWER
- W — EXISTING WATER MAIN
- UE — EXISTING UNDERGROUND ELECTRIC
- UT — EXISTING UNDERGROUND TELEPHONE
- UT — ABANDONED UNDERGROUND TELEPHONE
- 212 — MINOR CONTOUR LINE
- 215 — MAJOR CONTOUR LINE
- EXISTING ELECTRIC BOX
- 18" OAK — EXISTING DECIDUOUS TREE
- 24" PINE — EXISTING CONIFER TREE
- STAGE II LIMITS OF CONSTRUCTION
- SF — SILT FENCE, REF. DETAIL 1–C1.5
- CONSTRUCTION EXIT PAD, REF. DETAIL 2–C1.5
- CIP — CULVERT INLET PROTECTION, REF. DETAIL 7–C1.5
- IP — DROP INLET PROTECTION, REF. DETAIL 4–C1.5
- RR — RIPRAP OUTLET PROTECTION, REF. DETAIL 3–C1.5
- CD — CHECK DAM – RIPRAP REF. DETAIL 6–C1.5
- NEW ITEM TO BE CONSTRUCTED DURING PHASE
- NEW ITEM CONSTRUCTED DURING PREVIOUS PHASE

SYM.	D.O. NO.	ACTION	DATE	DESCRIPTION OF REVISION

DEFENSE COMMISSARY AGENCY
DIRECTORATE OF PERFORMANCE & POLICY
FORT LEE, VIRGINIA
LACKLAND AFB, TEXAS

DESIGNED BY: ---
DRAWN BY: ---
REVIEWED BY: ---

DESIGN/BUILD NEW COMMISSARY

EROSION AND SEDIMENT CONTROL PLAN- STAGE II

MAXWELL A.F.B. – GUNTER ANNEX, ALABAMA

SUBMITTED BY:
ENGINEER:

SOL. NO.
DATE: 01 AUG 2011
PROJECT NO. DEC0MP05
DRAWING NUMBER
SHEET NO. OF
SEQUENCE NO. C1.2

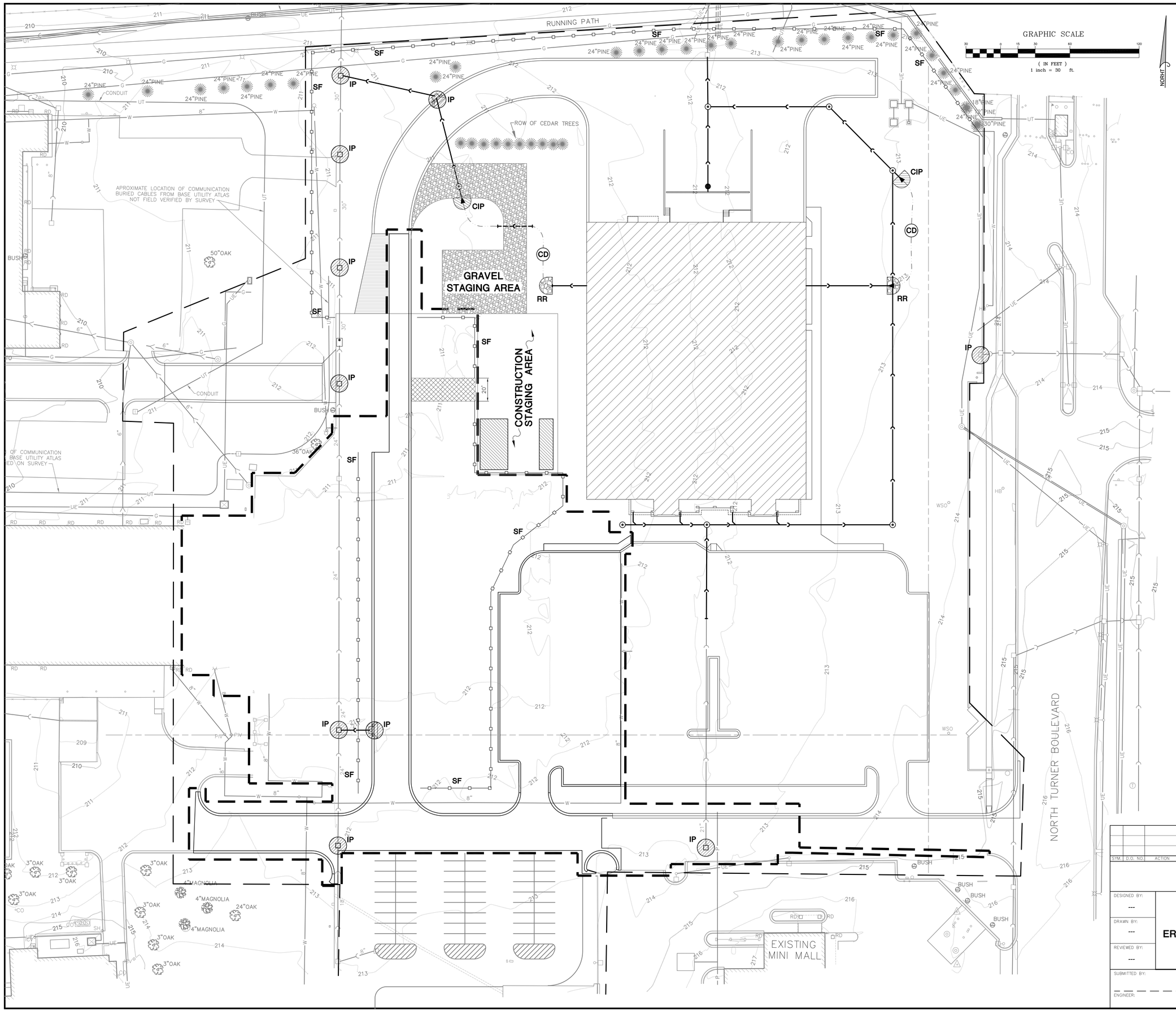

SYMBOL LEGEND

- EXISTING DRAINAGE STRUCTURE
- EXISTING MANHOLE
- EXISTING FIRE HYDRANT
- EXISTING VALVE BOX
- HB EXISTING HOSE BIB
- EXISTING METER BOX
- EXISTING LIGHT POLE
- EXISTING STORM SEWER
- EXISTING SANITARY SEWER
- W EXISTING WATER MAIN
- UE EXISTING UNDERGROUND ELECTRIC
- UT EXISTING UNDERGROUND TELEPHONE
- UT ABANDONED UNDERGROUND TELEPHONE
- 212 MINOR CONTOUR LINE
- 215 MAJOR CONTOUR LINE
- EXISTING ELECTRIC BOX
- 18" OAK EXISTING DECIDUOUS TREE
- 24" PINE EXISTING CONIFER TREE
- STAGE III LIMITS OF CONSTRUCTION
- SF SILT FENCE, REF. DETAIL 1–C1.5
- CONSTRUCTION EXIT PAD, REF. DETAIL 2–C1.5
- CIP CULVERT INLET PROTECTION, REF. DETAIL 7–C1.5
- IP DROP INLET PROTECTION, REF. DETAIL 4–C1.5
- RR RIPRAP OUTLET PROTECTION, REF. DETAIL 3–C1.5
- CD CHECK DAM – RIPRAP REF. DETAIL 6–C1.5
- NEW ITEM TO BE CONSTRUCTED DURING PHASE
- NEW ITEM CONSTRUCTED DURING PREVIOUS PHASE
- TEMPORARY STORM SEWER

SYM.	D.O. NO.	ACTION	DATE	DESCRIPTION OF REVISION

DEFENSE COMMISSARY AGENCY
DIRECTORATE OF PERFORMANCE & POLICY
FORT LEE, VIRGINIA
LACKLAND AFB, TEXAS

DESIGNED BY: ---
DRAWN BY: ---
REVIEWED BY: ---

DESIGN/BUILD NEW COMMISSARY

EROSION AND SEDIMENT CONTROL PLAN- STAGE III

MAXWELL A.F.B. – GUNTER ANNEX, ALABAMA

SUBMITTED BY:
ENGINEER:

SOL. NO.
DATE: 01 AUG 2011
PROJECT NO. DEOAMP05
DRAWING NUMBER
SHEET NO. OF
SEQUENCE NO. C1.3

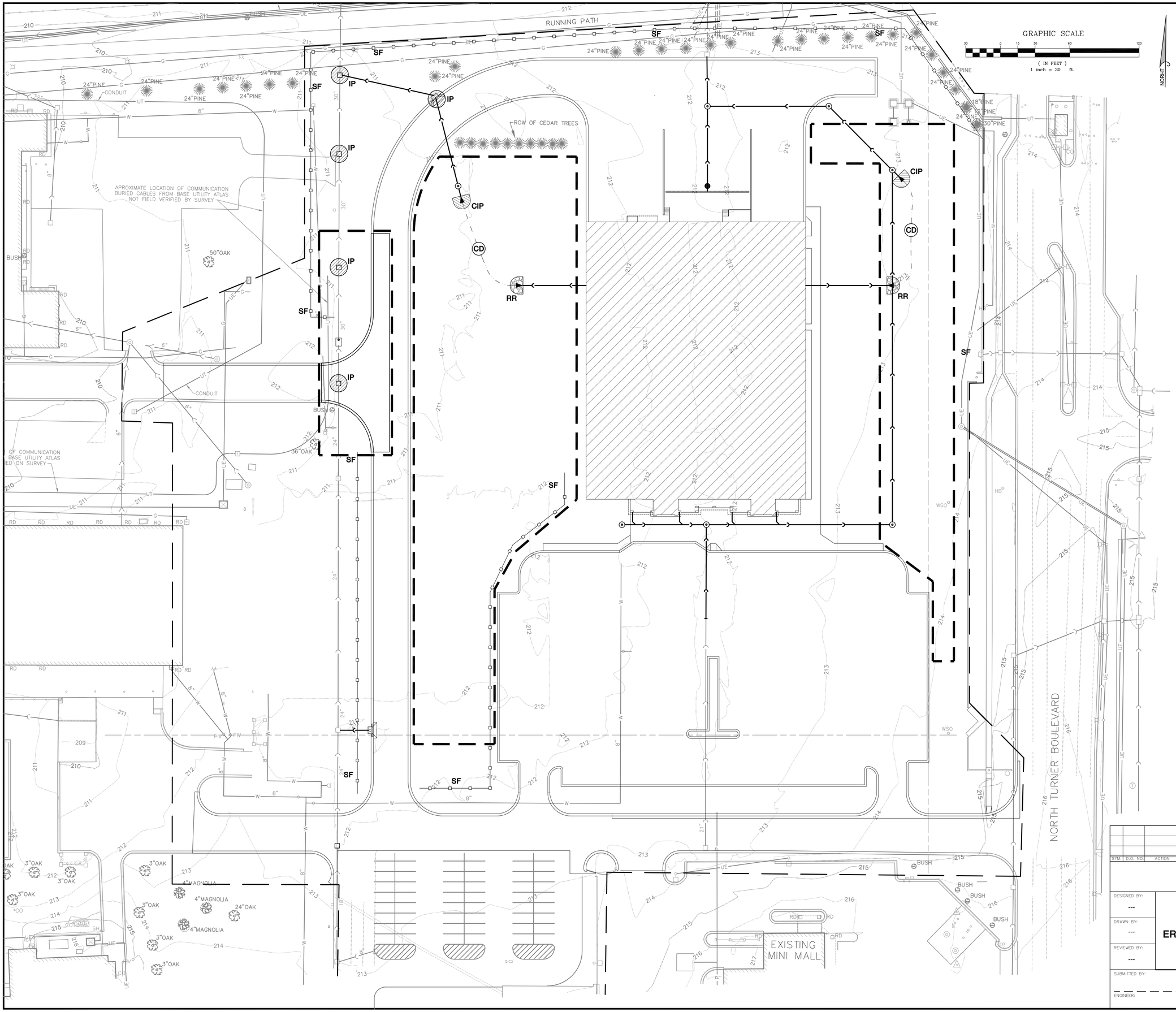

SYMBOL LEGEND

- EXISTING DRAINAGE STRUCTURE
- EXISTING MANHOLE
- EXISTING FIRE HYDRANT
- EXISTING VALVE BOX
- HB — EXISTING HOSE BIB
- EXISTING METER BOX
- EXISTING LIGHT POLE
- EXISTING STORM SEWER
- EXISTING SANITARY SEWER
- W — EXISTING WATER MAIN
- UE — EXISTING UNDERGROUND ELECTRIC
- UT — EXISTING UNDERGROUND TELEPHONE
- UT — ABANDONED UNDERGROUND TELEPHONE
- 212 — MINOR CONTOUR LINE
- 215 — MAJOR CONTOUR LINE
- EXISTING ELECTRIC BOX
- 18" OAK — EXISTING DECIDUOUS TREE
- 24" PINE — EXISTING CONIFER TREE
- STAGE IV LIMITS OF CONSTRUCTION
- SF — SILT FENCE, REF. DETAIL 1–C1.5
- CONSTRUCTION EXIT PAD, REF. DETAIL 2–C1.5
- CIP — CULVERT INLET PROTECTION, REF. DETAIL 7–C1.5
- IP — DROP INLET PROTECTION, REF. DETAIL 4–C1.5
- RR — RIPRAP OUTLET PROTECTION, REF. DETAIL 3–C1.5
- CD — CHECK DAM – RIPRAP REF. DETAIL 6–C1.5
- NEW ITEM TO BE CONSTRUCTED DURING PHASE
- NEW ITEM CONSTRUCTED DURING PREVIOUS PHASE

SYM.	D.O. NO.	ACTION	DATE	DESCRIPTION OF REVISION

DEFENSE COMMISSARY AGENCY
DIRECTORATE OF PERFORMANCE & POLICY
FORT LEE, VIRGINIA
LACKLAND AFB, TEXAS

DESIGNED BY: ---
DRAWN BY: ---
REVIEWED BY: ---
SUBMITTED BY:
ENGINEER:

DESIGN/BUILD NEW COMMISSARY

EROSION AND SEDIMENT CONTROL PLAN- STAGE IV

MAXWELL A.F.B. – GUNTER ANNEX, ALABAMA

SOL. NO. | DATE: 01 AUG 2011
PROJECT NO. DECAMP05
DRAWING NUMBER | SHEET NO. OF | SEQUENCE NO. C1.4

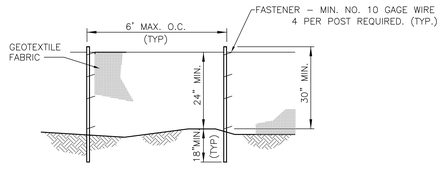

ELEVATION

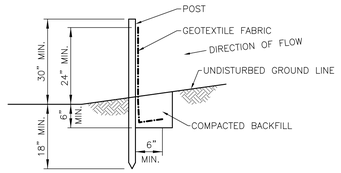

FABRIC ANCHOR DETAIL

NOTES:

1. TEMPORARY SEDIMENT FENCE SHALL BE INSTALLED PRIOR TO ANY GRADING WORK IN THE AREA TO BE PROTECTED. THEY SHALL BE MAINTAINED THROUGHOUT THE CONSTRUCTION PERIOD AND REMOVED IN CONJUNCTION WITH THE FINAL GRADING.
2. FILTER FABRIC SHALL MEET THE REQUIREMENTS OF MATERIAL SPECIFICATION 592 GEOTEXTILE TABLE 1 OR 2, CLASS WITH EQUIVALENT OPENING SIZE OF AT LEAST 30 FOR NONWOVEN AND 50 FOR WOVEN.
3. FENCE POST SHALL BE EITHER STANDARD STEEL POST OR WOOD POST WITH A MINMUM SECTIONAL AREA 3.0 SQ. IN.

1 SEDIMENT BARRIER – SILT FENCE DETAIL

C1.1–C1.4 | C1.5

NOT TO SCALE

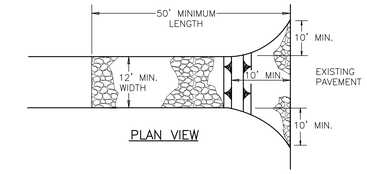

PLAN VIEW

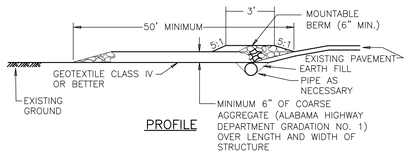

PROFILE

2 CONSTRUCTION EXIT PAD

C1.1–C1.4 | C1.5

NOT TO SCALE

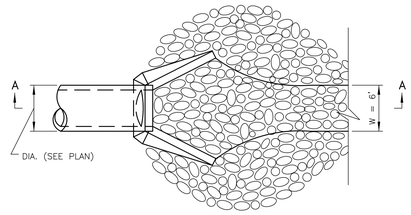

PLAN

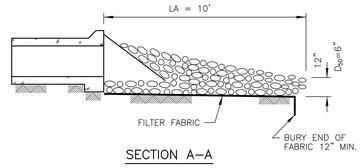

SECTION A–A

PIPE OUTLET TO CHANNEL

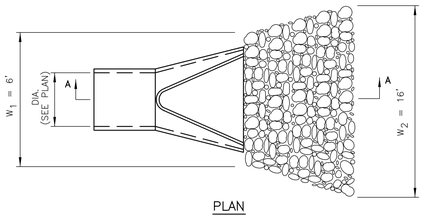

PLAN

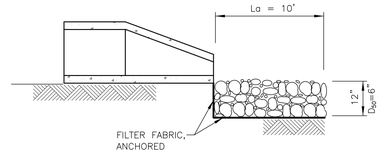

SECTION A–A

PIPE OUTLET TO FLAT AREA

3 RIPRAP OUTLET PROTECTION

C1.2–C1.4 | C1.5

NOT TO SCALE

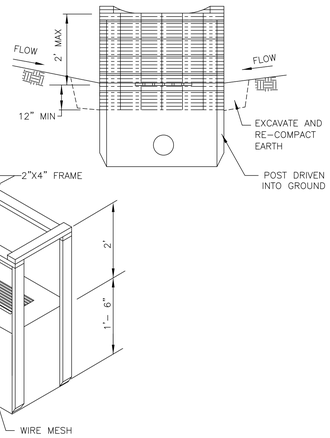

FILTER FABRIC

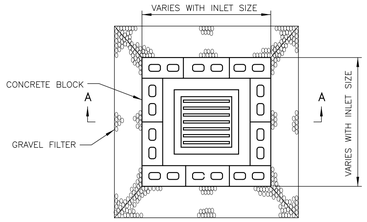

PLAN VIEW

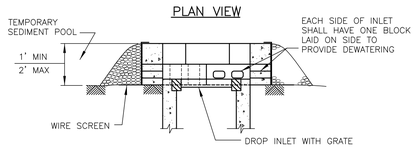

SECTION A–A

NOTES:

1. SEDIMENT SHALL BE REMOVED AND THE TRAP RESTORED TO ITS ORIGINAL DIMENSIONS WHEN THE SEDIMENT HAS ACCUMULATED TO 1/2 THE DESIGN DEPTH. REMOVED SEDIMENT SHALL BE DEPOSITED IN A SUITABLE AREA AND IN SUCH A MANNER THAT IT WILL NOT ERODE.
2. THE SEDIMENT TRAP SHALL BE REMOVED AND THE AREA STABILIZED WHEN THE CONSTRUCTED DRAINAGE AREA HAS BEEN PROPERLY STABILIZED.
3. THE WIRE SCREEN SHALL BE HARDWARE CLOTH OR COMPARABLE WIRE WESH WITH 1/2 INCH OPENINGS.
4. THE GRAVEL SHALL BE ALABAMA HIGHWAY DEPARTMENT NO. 57 COARSE AGGREGATE OR SIMILAR.

BLOCK AND GRAVEL

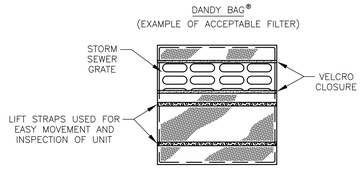

PLAN VIEW

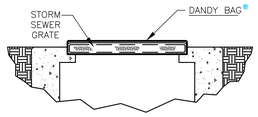

CROSS SECTION

FILTER FABRIC INSERT

4 DROP INLET PROTECTION

C1.1–C1.4 | C1.5

NOT TO SCALE

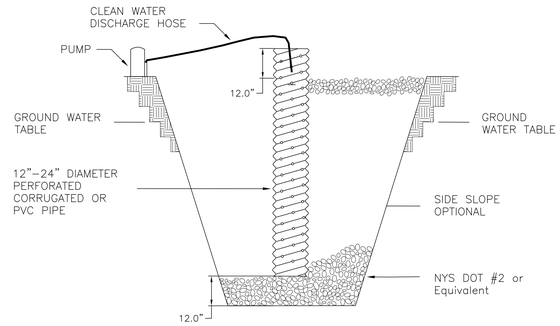

NOTES:

1. PIT DIMENSIONS ARE OPTIONAL.
2. THE STANDPIPE SHOULD BE CONSTRUCTED BY PERFORATING A 12–24" DIAMETER CORRUGATED OR PVC PIPE.
3. A BASE OF 2" AGGREGATE SHOULD BE PLACED IN THE PIT TO A DEPTH OF 12". AFTER INSTALLING THE STANDPIPE, THE PIT SURROUNDING THE STANDPIPE SHOULD BE BACKFILLED WITH 2" AGGREGATE.
4. THE STANDPIPE SHOULD EXTEND 12–18" ABOVE THE LIP OF THE PIT.
5. IF DISCHARGE WILL BE PUMPED DIRECTLY TO A STORM DRAINAGE SYSTEM, THE STANDPIPE SHOULD BE WRAPPED WITH FILTERCLOTH BEFORE INSTALLATION. IF DESIRED, 1/4"–1/2" HARDWARE CLOTH MAY BE PLACED AROUND THE STANDPIPE, PRIOR TO ATTACHING THE FILTERCLOTH.

6 SUMP PIT

– | C1.5

NOT TO SCALE

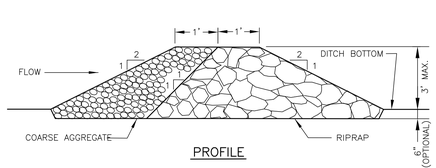

PROFILE

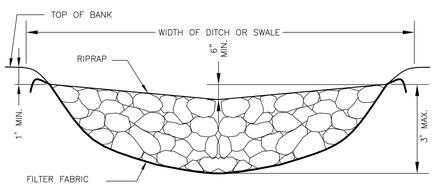

CROSS SECTION
CENTERLINE LOOKING DOWNSTREAM

6 CHECK DAM – RIPRAP

C1.2–C1.4 | C1.5

NOT TO SCALE

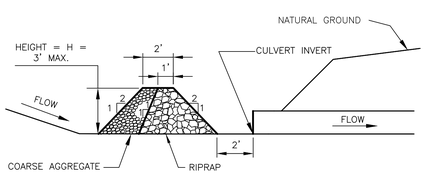

CENTERLINE CROSS SECTION

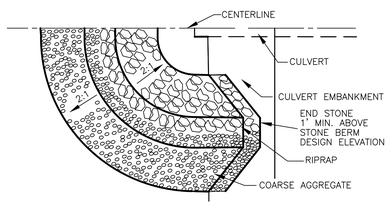

HALF PLAN VIEW

7 CULVERT INLET PROTECTION

C1.2–C1.4 | C1.5

NOT TO SCALE

SYM.	D.O. NO.	ACTION	DATE	DESCRIPTION OF REVISION

DEFENSE COMMISSARY AGENCY
DIRECTORATE OF PERFORMANCE & POLICY
FORT LEE, VIRGINIA
LACKLAND AFB, TEXAS

DESIGNED BY: ---
DRAWN BY: ---
REVIEWED BY: ---
SUBMITTED BY:
ENGINEER:

DESIGN/BUILD NEW COMMISSARY

SEDIMENT AND EROSION CONTROL DETAILS

MAXWELL A.F.B. – GUNTER ANNEX, ALABAMA

SOL. NO.
DATE: 01 AUG 2011
PROJECT NO. DEOAMP05
DRAWING NUMBER
SHEET NO. OF
SEQUENCE NO. C1.5

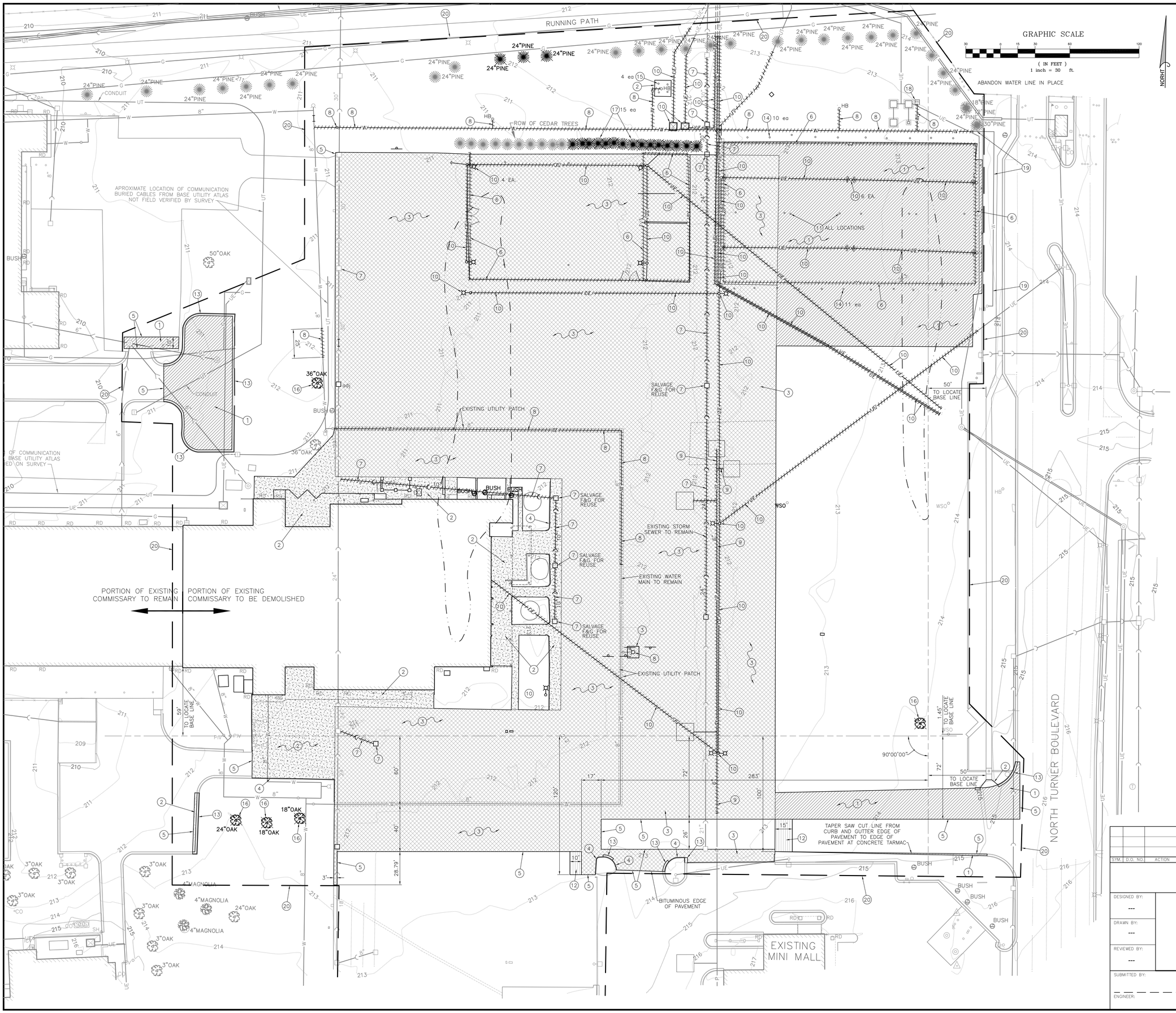

PLAN NOTES

1. THE CONTRACTOR MUST CONTACT THE ALABAMA DEPARTMENT OF ENVIRONMENTAL MANAGEMENT (ADEM) AT LEAST TWO WEEKS PRIOR TO MOBILIZING ON THE SITE. CONTACT PERSON: MS. KRISTY WRIGHT–KWG@ADEM.STATE.AL.US (334/271–7782)

KEYED NOTES

1. REMOVE BITUMINOUS PAVEMENT – MAY BE UNDERLAIN BY CONCRETE TARMAC
2. REMOVE CONCRETE SIDEWALK/PAVING
3. REMOVE REINFORCED TARMAC (11–INCHES THICK, STEEL REINFORCED, 10,000 PSI CONCRETE)
4. REMOVE CONCRETE CURB
5. SAW CUT PAVEMENT (FULL DEPTH)
6. REMOVE EXISTING CHAIN LINK FENCE
7. REMOVE DRAINAGE STRUCTURE OR SEWER
8. REMOVE FIRE HYDRANT, VALVE BOX OR WATER MAIN
9. REMOVE PETROLEUM LINE
10. REMOVE ELECTRIC CABLE, ELECTRIC BOX OR LIGHTING UNIT
11. REMOVE EXISTING TENNIS COURT EQUIPMENT
12. 15' BUTT JOINT, REF. DETAIL 15–C4.1
13. REMOVE CONCRETE CURB AND GUTTER
14. REMOVE BRACE POST
15. REMOVE BUMPER POST
16. REMOVE DECIDUOUS TREE
17. REMOVE CONIFER TREE
18. REMOVE METER BOX
19. ABANDON WATER LINE IN PLACE
20. PROJECT LIMIT LINE

SYMBOL LEGEND

- EXISTING DRAINAGE STRUCTURE
- EXISTING MANHOLE
- EXISTING FIRE HYDRANT
- EXISTING VALVE BOX
- HB EXISTING HOSE BIB
- EXISTING METER BOX
- EXISTING LIGHT POLE
- EXISTING STORM SEWER
- EXISTING SANITARY SEWER
- W EXISTING WATER MAIN
- UE EXISTING UNDERGROUND ELECTRIC
- UT EXISTING UNDERGROUND TELEPHONE
- UT ABANDONED UNDERGROUND TELEPHONE
- 212 MINOR CONTOUR LINE
- 215 MAJOR CONTOUR LINE
- EXISTING ELECTRIC BOX
- REMOVE DRAINAGE STRUCTURE
- adj ADJUST DRAINAGE STRUCTURE RIM ELEVATION
- REMOVE MANHOLE
- REMOVE FIRE HYDRANT
- REMOVE VALVE BOX
- REMOVE METER BOX
- REMOVE ELECTRIC BOX
- REMOVE STORM SEWER
- REMOVE SANITARY SEWER
- REMOVE WATER MAIN
- REMOVE UNDERGROUND ELECTRIC
- REMOVE UNDERGROUND TELEPHONE
- REMOVE BITUMINOUS PAVEMENT
- REMOVE CONCRETE SIDEWALK/PAVEMENT
- REMOVE CONCRETE REINFORCED TARMAC
- 1 1/2" BITUMINOUS SURFACE REMOVAL
- 18" OAK EXISTING DECIDUOUS TREE
- 24" PINE EXISTING CONIFER TREE
- 18" OAK REMOVE EXISTING DECIDUOUS TREE
- 24" PINE REMOVE EXISTING CONIFER TREE

SYM.	D.O. NO.	ACTION	DATE	DESCRIPTION OF REVISION

DEFENSE COMMISSARY AGENCY
DIRECTORATE OF PERFORMANCE & POLICY
FORT LEE, VIRGINIA
LACKLAND AFB, TEXAS

DESIGNED BY: ---
DRAWN BY: ---
REVIEWED BY: ---

DESIGN/BUILD NEW COMMISSARY

SITE DEMOLITION PLAN

MAXWELL A.F.B. – GUNTER ANNEX, ALABAMA

SUBMITTED BY:
ENGINEER:

SOL. NO.
DATE: 01 AUG 2011
PROJECT NO. DEC4MP05
DRAWING NUMBER
SHEET NO. OF
SEQUENCE NO. C2.1

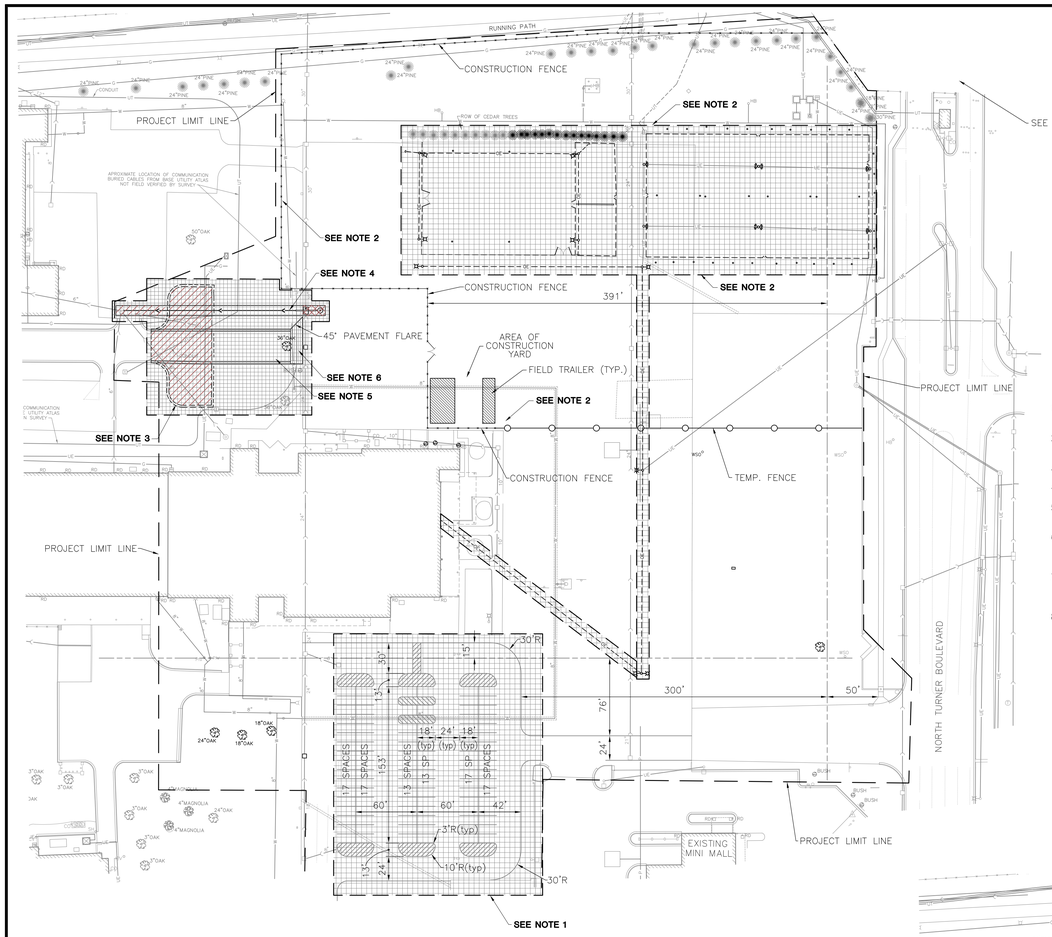

STAGE I-A

1. STRIPE NEW TEMPORARY PARKING AREA PAVEMENT MARKINGS AS SHOWN ON STAGE I–A PLAN.
2. BEGIN TO SET UP CONSTRUCTION FENCE, TEMP FENCE AND CONSTRUCTION YARD AT THE NORTHEAST CORNER OF EXISTING COMMISSARY.
3. REMOVE EXISTING BITUMINOUS PAVEMENT AND CONCRETE CURB AND GUTTER.
4. CONSTRUCT NEW SANITARY SEWER ALONG WITH INTERFERENCE BOX AND MANHOLE.
5. CONSTRUCT NEW PAVEMENT AND CONCRETE CURB AND GUTTER TO BEGINNING OF RADIUS RETURN.
6. ADD TEMPORARY BITUMINOUS PAVEMENT BETWEEN NEW PAVEMENT AND EXISTING CONCRETE TARMAC PAVEMENT. MATCH ELEVATION OF NEW AND EXISTING PAVEMENTS.
7. REMOVE ALL ABOVE GROUND EXISTING TOPO FEATURE. (FENCES, POWER POLES, LIGHT POLES, OVERHEAD ELECTRIC AND TREES. LEAVE FIRE HYDRANTS OR OTHER WATER APPURTANANCES IN PLACE UNTIL AFTER PAVEMENT REMOVAL.
8. EXISTING COMMISSARY TO REMAIN OPEN AND TOTALLY FUNCTIONAL AT ALL TIMES.

NORTH

GRAPHIC SCALE

(IN FEET)
1 inch = 60 ft.

NOTES

1. CONSTRUCTION ACCESS TO THE PROJECT SITE WILL BE VIA THE DICKINSON GATE. THE DICKINSON GATE WILL BE UNDERGOING RENOVATION DURING THE COMMISSARY PROJECT. FOR PART OF THE PROJECT DURATION, CONSTRUCTION TRAFFIC WILL BE REQUIRED TO USE A TEMPORARY ACCESS GATE LOCATED DIRECTLY ADJACENT TO THE DICKINSON GATE. REFER TO ATTACHMENT 20 FOR PLANS OF THE DICKINSON GATE PROJECT.

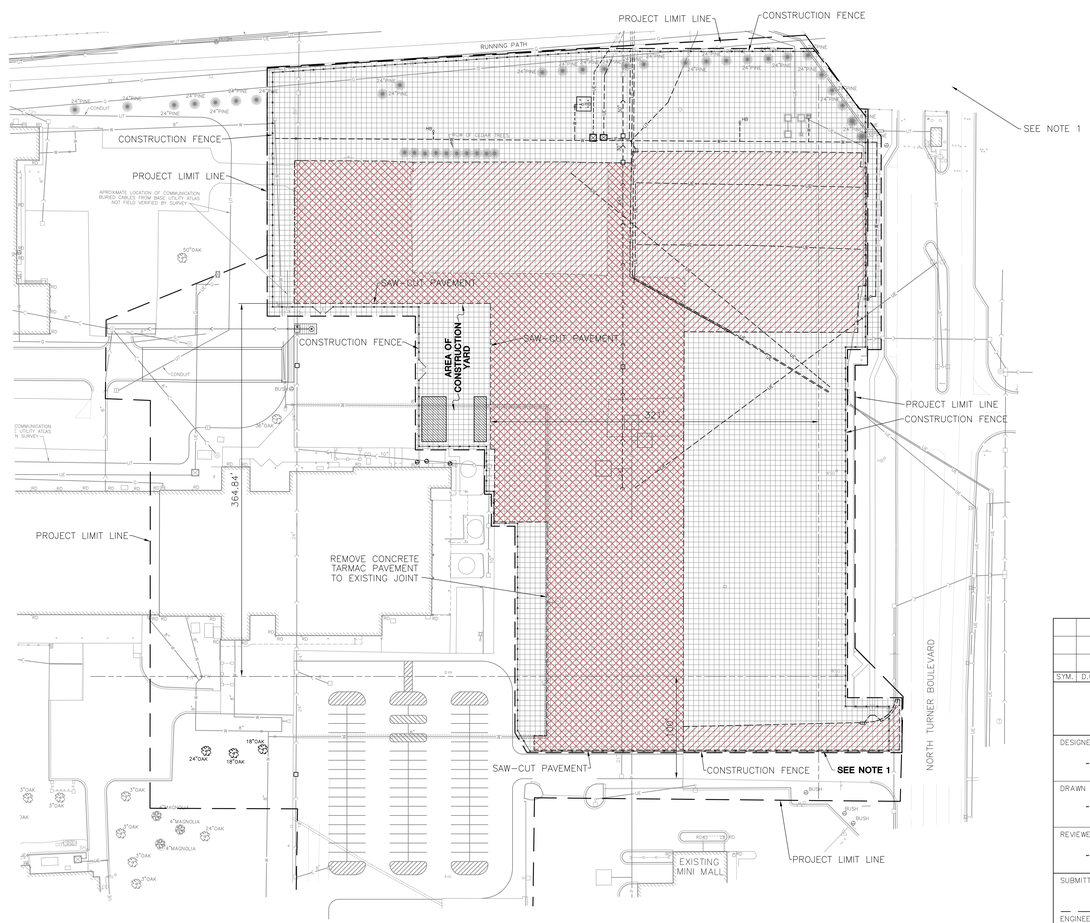

STAGE I-B

1. COMPLETE SET UP OF CONSTRUCTION FENCE AROUND REMAINING WORK AREA.
2. REMOVE EXISTING CONCRETE TARMAC AND BITUMINOUS PAVEMENT.
3. REMOVE EXISTING UNDERGROUND UTILITIES AS SHOWN. MAINTAIN SERVICE TO ALL SURROUNDING BUILDINGS AND USES AT ALL TIMES.

LEGEND

- BITUMINOUS PAVEMENT REMOVAL
- CONCRETE TARMAC REMOVAL
- TEMPORARY BITUMINOUS PAVEMENT
- STAGE WORK AREA
- TO BE REMOVED
- NEW ITEM TO BE CONSTRUCTED DURING CURRENT STAGE
- NEW ITEM CONSTRUCTED DURING PREVIOUS STAGE
- ---OE--- UTILITY TO BE REMOVED (SEE SHEET C2.1 FOR UTILITY LEGEND)
- CONSTRUCTION FENCE
- NEW SANITARY SEWER

NOTE:

THE SITE STAGING PLANS ARE NOT INTENDED TO BE USED TO CONSTRUCT THE PROJECT, BUT RATHER TO INDICATE WORK AREAS AND OFFER POSSIBLE ALTERNATIVES FOR MAINTAINING ACCESS AND DRAINING THESE WORK AREAS DURING CONSTRUCTION. REFER TO SHEETS C2.1, C3.1, C5.1, C6.1, C7.1, L1.1 AS WELL AS APPLICABLE DETAILS FOR INFORMATION REGARDING CONSTRUCTION OF THE IMPROVEMENTS.

SYM.	D.O. NO.	ACTION	DATE	DESCRIPTION OF REVISION

DEFENSE COMMISSARY AGENCY
DIRECTORATE OF PERFORMANCE & POLICY
FORT LEE, VIRGINIA
LACKLAND AFB, TEXAS

DESIGNED BY: ---
DRAWN BY: ---
REVIEWED BY: ---

DESIGN/BUILD NEW COMMISSARY

SITE STAGING PLAN - STAGE I

MAXWELL A.F.B. – GUNTER ANNEX, ALABAMA

SUBMITTED BY:
ENGINEER:

SOL. NO.
DATE: 01 AUG 2011
PROJECT NO. DECAMPO5
DRAWING NUMBER
SHEET NO. OF
SEQUENCE NO. C2.2

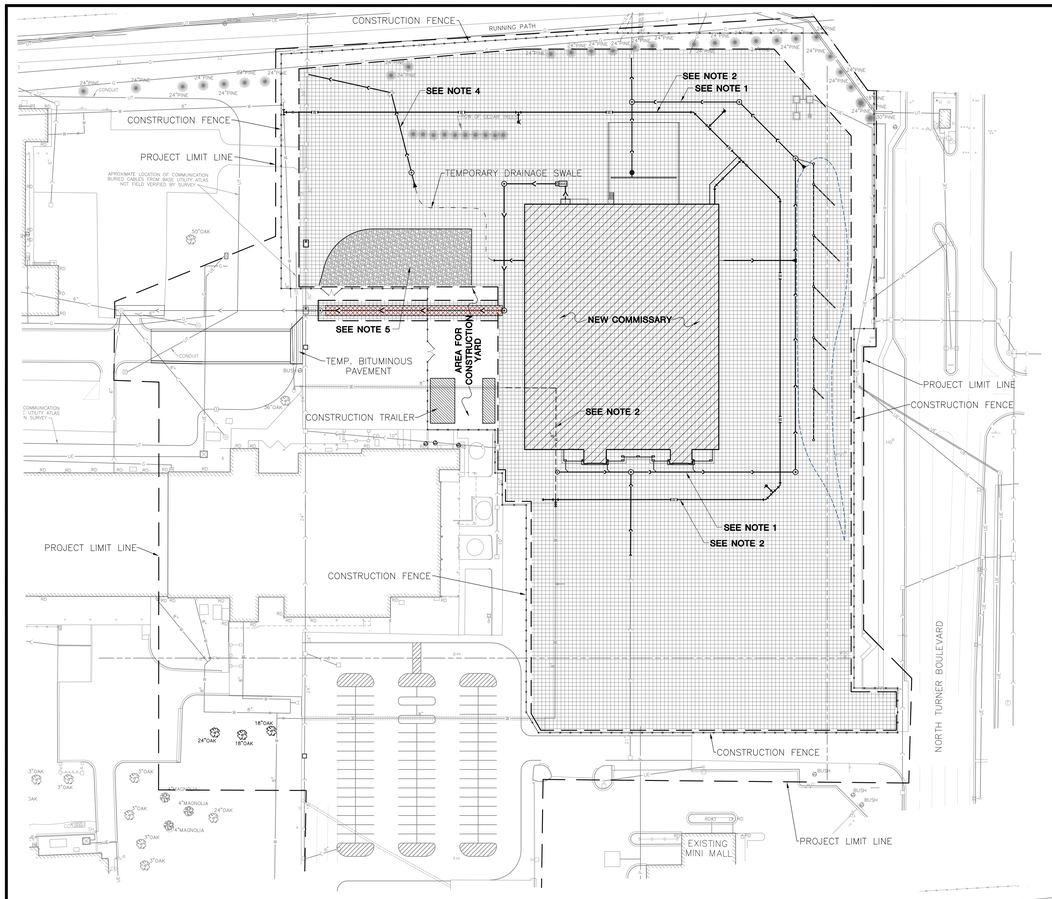

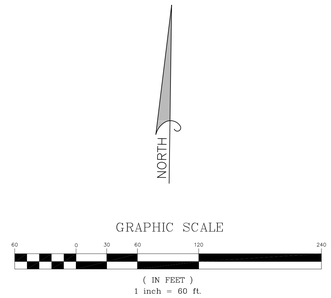

STAGE II-A

1. CONSTRUCT NEW STORM SEWER, SANITARY SEWER AND ROUGH SITE GRADING WITHIN STAGE II–A WORK AREA.
2. CONSTRUCT NEW WATER MAIN AND REMOVE EXISTING MAIN BEFORE BEGINNING CONSTRUCTION OF NEW BUILDING.
3. BEGIN CONSTRUCTION OF NEW BUILDING AND SERVICE AREA.
4. CONSTRUCT A PORTION OF NEW STORM SEWER FOR ROOF DRAINS ON WEST SIDE OF COMMISSARY. PROVIDE A TEMPORARY DRAINAGE SWALE TO NEW CONCRETE FLARED END SECTION.
5. INSTALL GRAVEL STAGING AREA AND TRUCK ENTRANCE.

NOTES

1. CONSTRUCTION ACCESS TO THE PROJECT SITE WILL BE VIA THE DICKINSON GATE. THE DICKINSON GATE WILL BE UNDERGOING RENOVATION DURING THE COMMISSARY PROJECT. FOR PART OF THE PROJECT DURATION, CONSTRUCTION TRAFFIC WILL BE REQUIRED TO USE A TEMPORARY ACCESS GATE LOCATED DIRECTLY ADJACENT TO THE DICKINSON GATE. REFER TO ATTACHMENT 20 FOR PLANS OF THE DICKINSON GATE PROJECT.

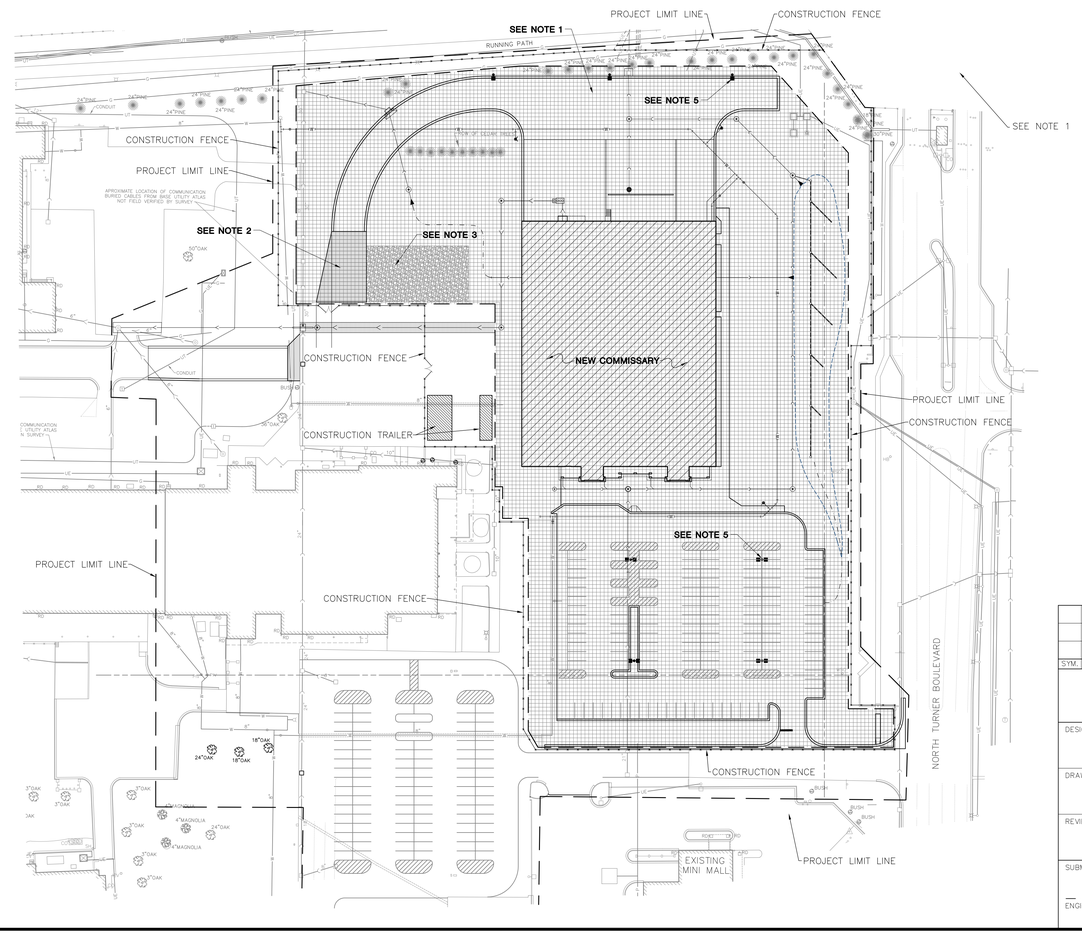

STAGE II-B

1. CONSTRUCT NEW LOADING AREA AND LOADING AREA ACCESS DRIVE UP TO BINDER COURSE AFTER ALL UNDERGROUND UTILITIES HAVE BEEN INSTALLED AND NEW BUILDING EXTERIOR IS COMPLETE. CONSTRUCT ACCESS DRIVE TO RADIUS POINT AS SHOWN ON PLAN.
2. CONSTRUCT TEMPORARY BITUMINOUS PAVEMENT BETWEEN NEW PAVEMENT PAVEMENT AND EXISTING CONCRETE TARMAC PAVEMENT MATCH GRADES BETWEEN NEW AND EXISTING PAVEMENT.
3. ADJUST GRAVEL CONSTRUCTION STAGING AREA AS NECESSARY.
4. CONSTRUCT THE INDICATED PORTION OF THE NEW BITUMINOUS PARKING LOT PAVEMENT AND CURB AND GUTTER LOCATED TO THE SOUTH OF THE NEW COMMISSARY UP TO THE BINDER COURSE.
5. INSTALL NEW PARKING AREA LIGHTING.
6. INSTALL TEMPORARY PAVEMENT MARKING FOR THE NEW FRONT PARKING LOT.

LEGEND

- STAGE WORK AREA
- NEW GRAVEL CONSTRUCTION STAGING AREA
- TEMPORARY BITUMINOUS PAVEMENT
- UTILITY TO BE REMOVED (SEE SHEET C2.1 FOR UTILITY LEGEND)
- NEW UNDERGROUND UTILITY (SEE SHEET C6.1 FOR UTILITY LEGEND)
- NEW UNDERGROUND UTILITY CONSTRUCTED DURING PREVIOUS STAGE
- CONSTRUCTION FENCE
- NEW ITEM TO BE CONSTRUCTED DURING CURRENT STAGE
- NEW ITEM CONSTRUCTED DURING PREVIOUS STAGE

NOTE:

THE SITE STAGING PLANS ARE NOT INTENDED TO BE USED TO CONSTRUCT THE PROJECT, BUT RATHER TO INDICATE WORK AREAS AND OFFER POSSIBLE ALTERNATIVES FOR MAINTAINING ACCESS AND DRAINING THESE WORK AREAS DURING CONSTRUCTION. REFER TO SHEETS C2.1, C3.1, C5.1, C6.1, C7.1, L1.1 AS WELL AS APPLICABLE DETAILS FOR INFORMATION REGARDING CONSTRUCTION OF THE IMPROVEMENTS.

SYM.	D.O. NO.	ACTION	DATE	DESCRIPTION OF REVISION

DEFENSE COMMISSARY AGENCY
DIRECTORATE OF PERFORMANCE & POLICY
FORT LEE, VIRGINIA
LACKLAND AFB, TEXAS

DESIGNED BY: ---
DRAWN BY: ---
REVIEWED BY: ---

DESIGN/BUILD NEW COMMISSARY

SITE STAGING PLAN - STAGE II

MAXWELL A.F.B. – GUNTER ANNEX, ALABAMA

SUBMITTED BY:
ENGINEER:

SOL. NO.
DATE: 01 AUG 2011
PROJECT NO. DE04MP03
DRAWING NUMBER
SHEET NO. OF
SEQUENCE NO.
C2.3

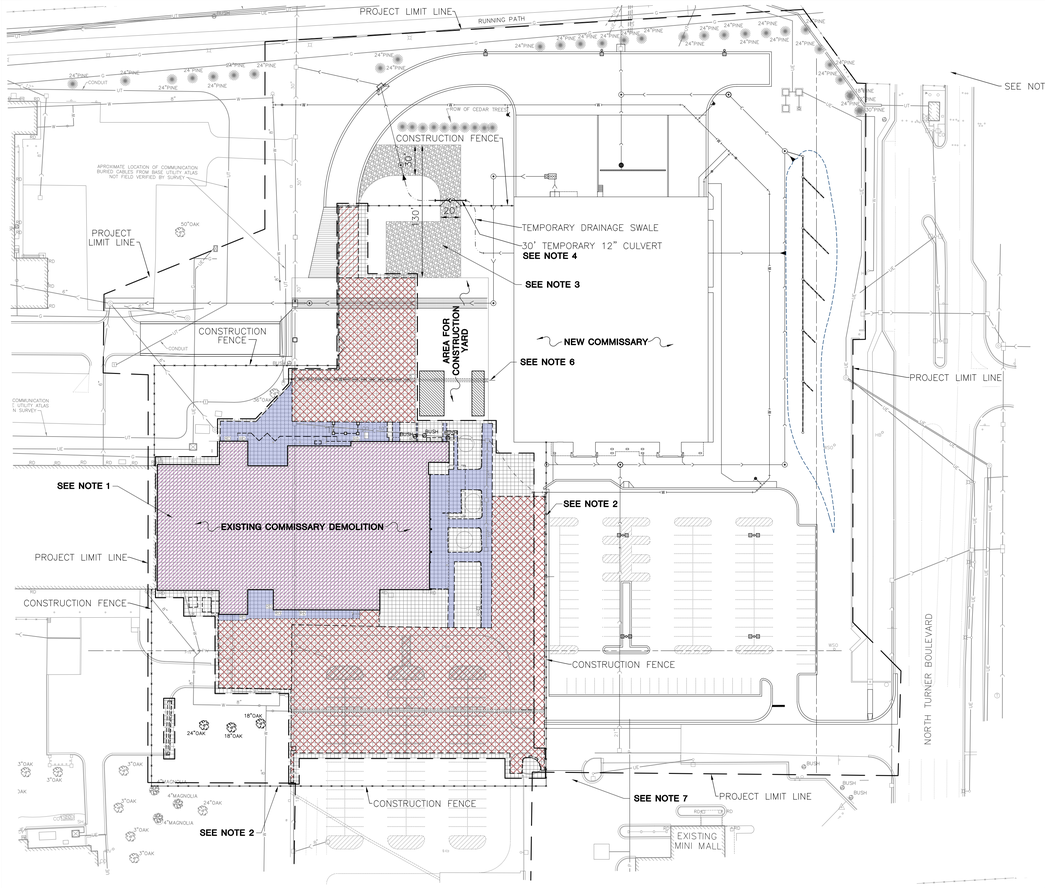

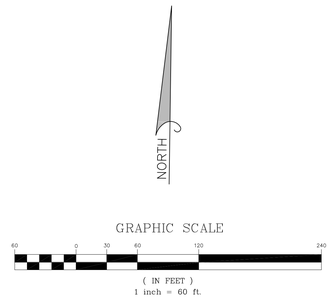

STAGE III-A

1. AFTER STAGES II-A AND II-B ARE COMPLETED AND COMMISSARY IS FULLY FUNCTIONAL BEGIN DEMOLITION OF OLD COMMISSARY AS SHOWN ON DEMOLITION PLAN.
2. REMOVE AND RELOCATE CONSTRUCTION FENCE, AS NECESSARY TO PROTECT THE ACTIVE CONSTRUCTION AREA.
3. ADJUST GRAVEL CONSTRUCTION STAGING AREA AS SHOWN
4. ADD TEMPORARY DRAINAGE CULVERT UNDER GRAVEL DRIVEWAY.
5. REMOVE EXISTING CONCRETE TARMAC, BITUMINOUS AND CONCRETE PAVEMENT/SIDEWALK.
6. REMOVE A PORTION OF WATER MAIN AS SHOWN.
7. PARKING AREA ACCESS DRIVE AND NORTH ENTRANCE TO THE MINI MALL/GAS STATION TO REMAIN OPEN DURING THIS STAGE.

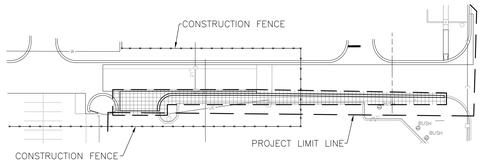

STAGE III-C

1. CONSTRUCT NEW CURB AND GUTTER AND PAVEMENT UP TO NEW BINDER COURSE.
2. NEW COMMISSARY ENTRANCE TO REMAIN OPEN AT ALL TIMES

STAGE III-B

1. AFTER DEMOLITION IS COMPLETED, CONSTRUCT REMAINING STORM SEWER, WATER MAIN AND INSTALL REMAINING PARKING AREA LIGHTING.
2. CLOSE NORTHERN ENTRANCE TO MINI MALL/GAS STATION AT PARKING AREA ACCESS DRIVE. ENTRANCE TO NEW COMMISSARY TO REMAIN OPEN AT ALL TIMES.
3. REMOVE CONCRETE CURB AND GUTTER AND PAVEMENT ALONG SOUTH EDGE OF PAVEMENT.
4. CONSTRUCT REMAINDER OF COMMISSARY FRONT PARKING AREA AND COMMISSARY TRUCK DOCK ACCESS DRIVE. TRUCK DOCK IS TO REMAIN FULLY FUNCTIONAL AT ALL TIMES. ONLY CONSTRUCT HALF OF NEW ACCESS DRIVE TO KEEP TRUCK DOCK FUNCTIONAL.
5. CONSTRUCT ACCESS DRIVE IN THE AREA OF THE OLD COMMISSARY.

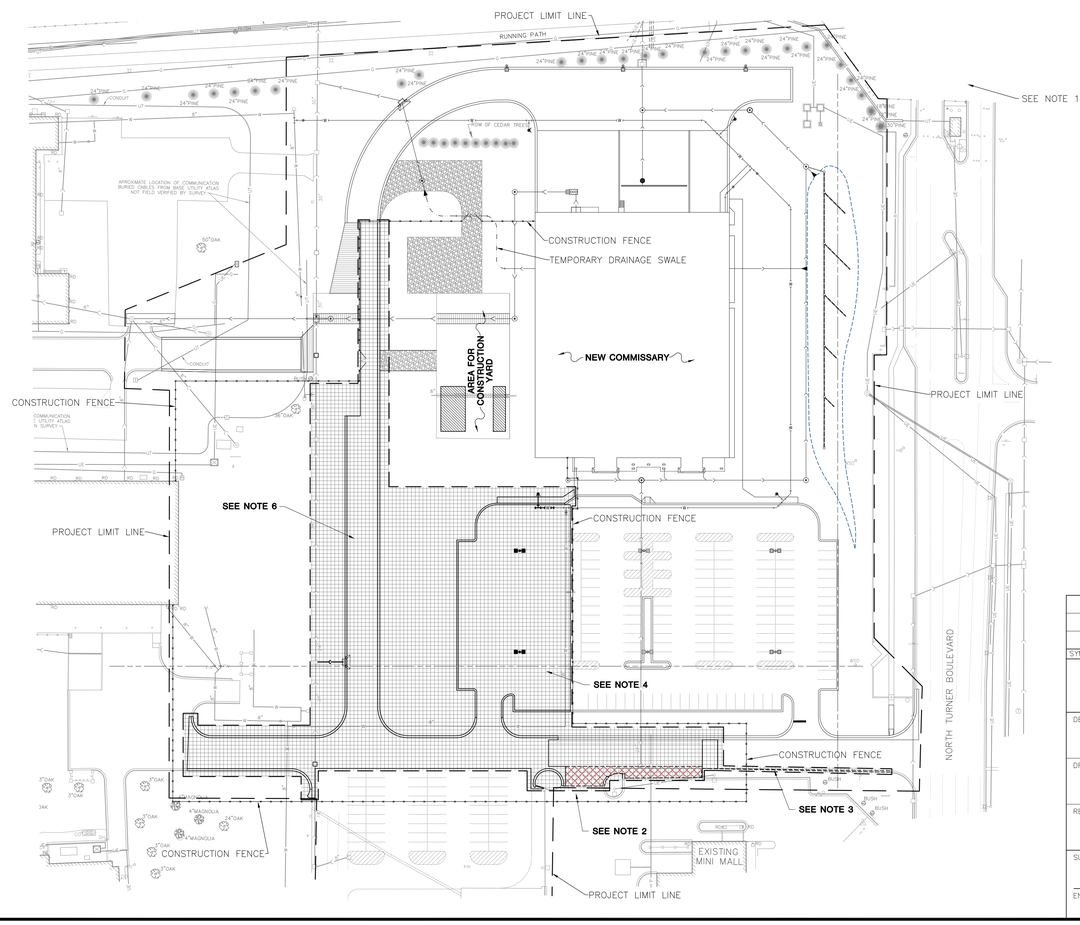

NOTES

1. CONSTRUCTION ACCESS TO THE PROJECT SITE WILL BE VIA THE DICKINSON GATE. THE DICKINSON GATE WILL BE UNDERGOING RENOVATION DURING THE COMMISSARY PROJECT. FOR PART OF THE PROJECT DURATION, CONSTRUCTION TRAFFIC WILL BE REQUIRED TO USE A TEMPORARY ACCESS GATE LOCATED DIRECTLY ADJACENT TO THE DICKINSON GATE. REFER TO ATTACHMENT 20 FOR PLANS OF THE DICKINSON GATE PROJECT.

LEGEND

- BITUMINOUS PAVEMENT REMOVAL
- CONCRETE TARMAC REMOVAL
- TEMPORARY BITUMINOUS PAVEMENT
- CONCRETE PAVEMENT/SIDEWALK REMOVAL
- WORK AREA
- NEW GRAVEL CONSTRUCTION STAGING AREA
- TO BE REMOVED
- NEW ITEM TO BE CONSTRUCTED DURING CURRENT STAGE
- NEW ITEM CONSTRUCTED DURING PREVIOUS STAGE
- CONSTRUCTION FENCE
- UTILITY TO BE REMOVED (SEE SHEET C2.1 FOR UTILITY LEGEND)
- NEW UNDERGROUND UTILITY (SEE SHEET C6.1 FOR UTILITY LEGEND)

NOTE:

THE SITE STAGING PLANS ARE NOT INTENDED TO BE USED TO CONSTRUCT THE PROJECT, BUT RATHER TO INDICATE WORK AREAS AND OFFER POSSIBLE ALTERNATIVES FOR MAINTAINING ACCESS AND DRAINING THESE WORK AREAS DURING CONSTRUCTION. REFER TO SHEETS C2.1, C3.1, C5.1, C6.1, C7.1, L1.1 AS WELL AS APPLICABLE DETAILS FOR INFORMATION REGARDING CONSTRUCTION OF THE IMPROVEMENTS.

SYM.	D.O. NO.	ACTION	DATE	DESCRIPTION OF REVISION

DEFENSE COMMISSARY AGENCY
DIRECTORATE OF PERFORMANCE & POLICY
FORT LEE, VIRGINIA
LACKLAND AFB, TEXAS

DESIGNED BY: ---
DRAWN BY: ---
REVIEWED BY: ---

DESIGN/BUILD NEW COMMISSARY

SITE STAGING PLAN - STAGE III

MAXWELL A.F.B. – GUNTER ANNEX, ALABAMA

SUBMITTED BY:
ENGINEER:

SOL. NO.
DATE: 01 AUG 2011
PROJECT NO. DE04MP03
DRAWING NUMBER
SHEET NO. OF
SEQUENCE NO. C2.4

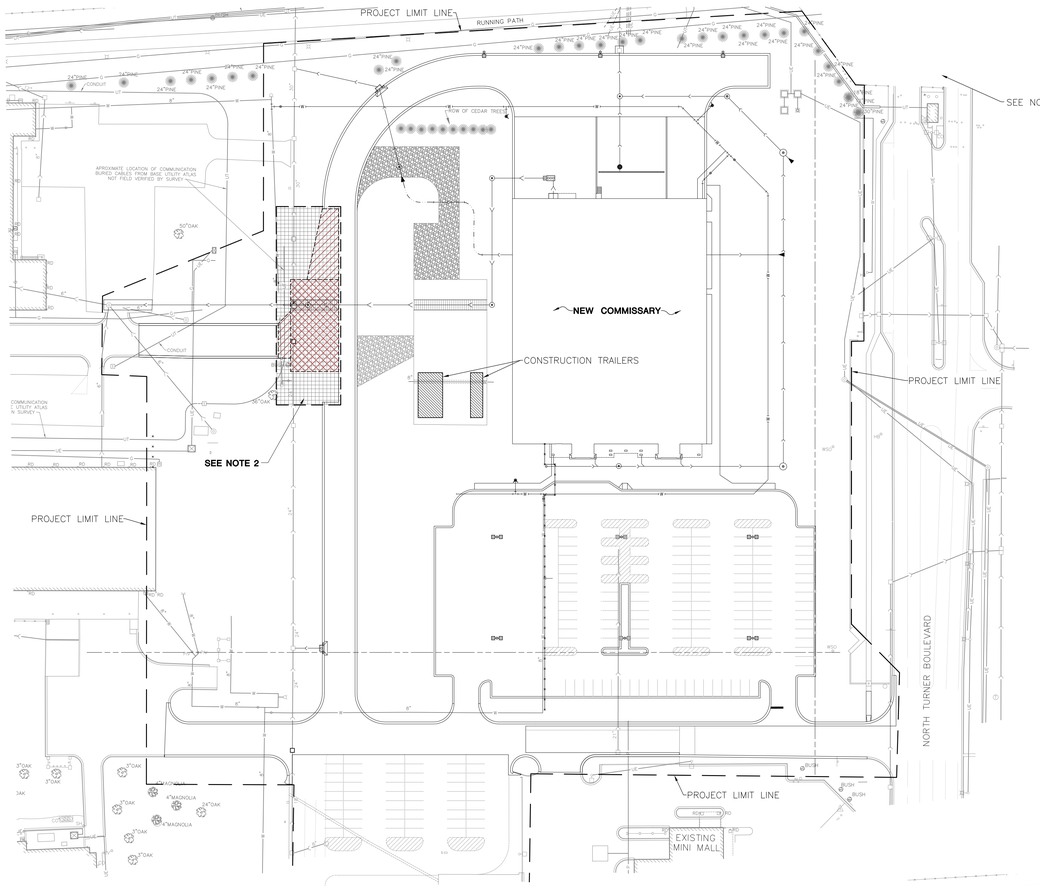

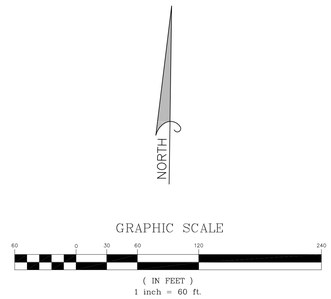

STAGE IV-A

1. AFTER COMPLETION OF STAGE III–B, REMOVE REMAINDER OF CONCRETE TARMAC PAVEMENT AND TEMPORARY PAVEMENT.
2. NEW COMMISSARY TRUCK DOCK ACCESS DRIVE IS TO REMAIN TOTALLY FUNCTIONAL DURING CONSTRUCTION OF THE REMAINDER OF THE ACCESS DRIVE.

STAGE IV-B

1. CONSTRUCT REMAINDER OF TRUCK DOCK ACCESS DRIVE UP TO BINDER COURSE.
2. REMOVE REMAINING CONCRETE TARMAC PAVEMENT AT CONSTRUCTION STAGING AREA.
3. REMOVE REMAINING EXISTING WATER MAIN.
4. ADD REMAINING ROOF DRAIN STORM SEWER AT WEST SIDE OF COMMISSARY.
5. AFTER COMPLETION OF REMAINING ACCESS DRIVE CONSTRUCTION APPLY FINAL SURFACE COURSE PAVEMENT TO ENTIRE NEW COMMISSARY SITE.
6. INSTALL NEW PERMANENT PAVEMENT MARKINGS.
7. WHEN CONSTRUCTION STAGING AREA IS REMOVED, BEGIN FINAL GRADING AND LANDSCAPING TO THE WEST OF THE NEW COMMISSARY.

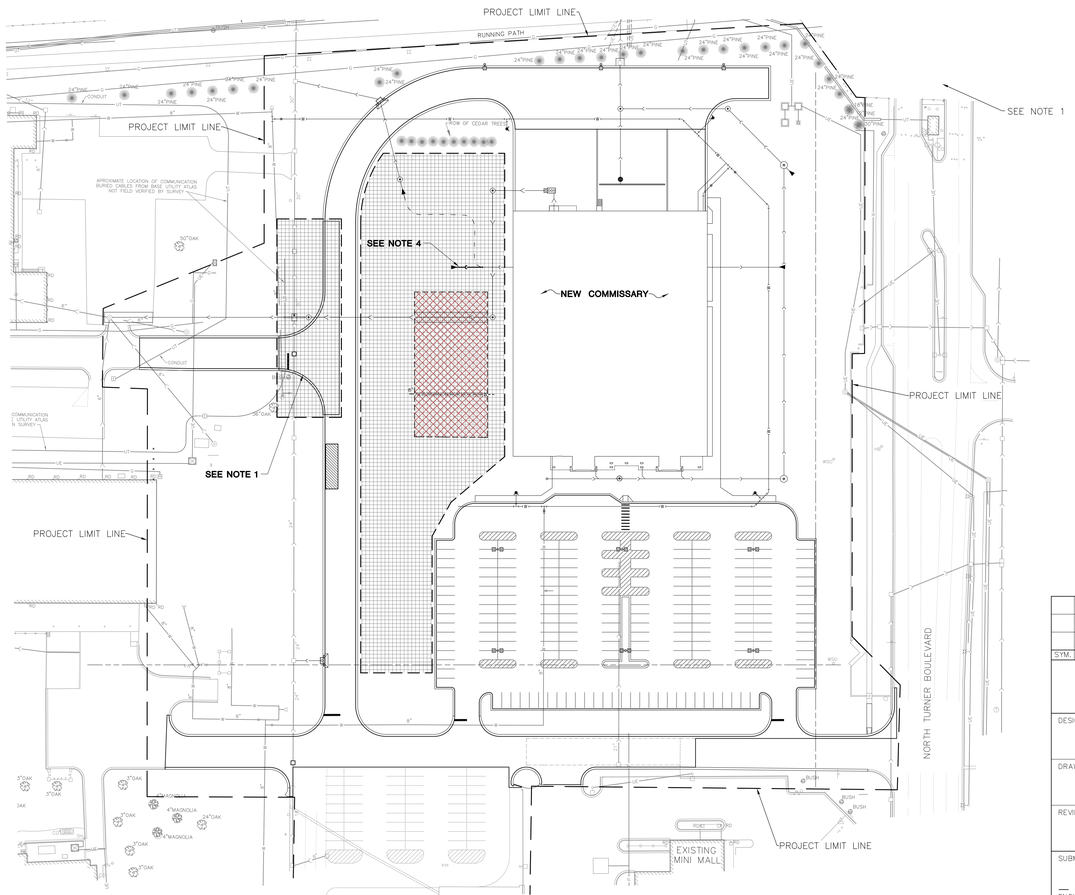

NOTES

1. CONSTRUCTION ACCESS TO THE PROJECT SITE WILL BE VIA THE DICKINSON GATE. THE DICKINSON GATE WILL BE UNDERGOING RENOVATION DURING THE COMMISSARY PROJECT. FOR PART OF THE PROJECT DURATION, CONSTRUCTION TRAFFIC WILL BE REQUIRED TO USE A TEMPORARY ACCESS GATE LOCATED DIRECTLY ADJACENT TO THE DICKINSON GATE. REFER TO ATTACHMENT 20 FOR PLANS OF THE DICKINSON GATE PROJECT.

LEGEND

- BITUMINOUS PAVEMENT REMOVAL
- CONCRETE TARMAC REMOVAL
- TEMPORARY BITUMINOUS PAVEMENT
- STAGE WORK AREA
- NEW GRAVEL CONSTRUCTION STAGING AREA
- TO BE REMOVED
- NEW ITEM TO BE CONSTRUCTED DURING CURRENT STAGE
- NEW ITEM CONSTRUCTED DURING PREVIOUS STAGE
- ----W---- UTILITY TO BE REMOVED (SEE SHEET C2.1 FOR UTILITY LEGEND)

NOTE:

THE SITE STAGING PLANS ARE NOT INTENDED TO BE USED TO CONSTRUCT THE PROJECT, BUT RATHER TO INDICATE WORK AREAS AND OFFER POSSIBLE ALTERNATIVES FOR MAINTAINING ACCESS AND DRAINING THESE WORK AREAS DURING CONSTRUCTION. REFER TO SHEETS C2.1, C3.1, C5.1, C6.1, C7.1, L1.1 AS WELL AS APPLICABLE DETAILS FOR INFORMATION REGARDING CONSTRUCTION OF THE IMPROVEMENTS.

SYM.	D.O. NO.	ACTION	DATE	DESCRIPTION OF REVISION

DEFENSE COMMISSARY AGENCY
DIRECTORATE OF PERFORMANCE & POLICY
FORT LEE, VIRGINIA
LACKLAND AFB, TEXAS

DESIGNED BY: ---
DRAWN BY: ---
REVIEWED BY: ---

DESIGN/BUILD NEW COMMISSARY

SITE STAGING PLAN - STAGE IV

MAXWELL A.F.B. – GUNTER ANNEX, ALABAMA

SUBMITTED BY:
ENGINEER:

SOL. NO.
DATE: 01 AUG 2011
PROJECT NO. DE04MP03
DRAWING NUMBER
SHEET NO. OF
SEQUENCE NO. C2.5

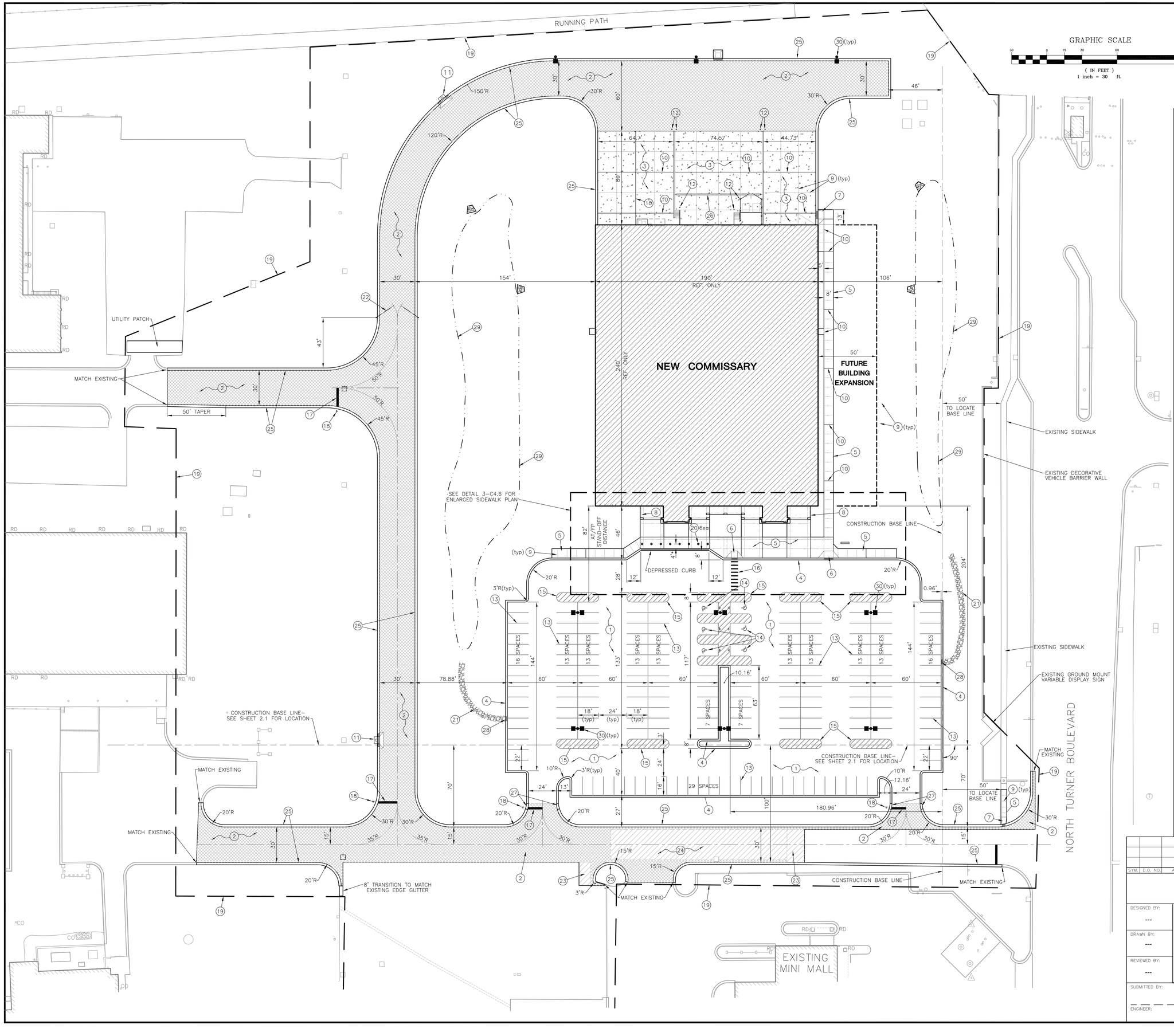

KEYED NOTES

1. PARKING AREA PAVEMENT, REF. DETAIL 1–C4.1
2. HEAVY DUTY PAVEMENT, REF. DETAIL 2–C4.1
3. CONCRETE LOADING AREA PAVEMENT, REF. DETAIL 3–C4.1
4. CONCRETE CURB AND GUTTER, TYPE B–6.12, REF. DETAIL 6–C4.1
5. CONCRETE SIDEWALK, REF. DETAIL 5–C4.1
6. SIDEWALK RAMP TYPE A, REF. DETAIL 8–C4.1
7. FORKLIFT RAMP, REF. DETAIL 9–C4.1
8. THICKENED EDGE SIDEWALK, REF. DETAIL 14–C4.1
9. CONTRACTION JOINT, REF. DETAIL 11–C4.1
10. EXPANSION JOINT, REF. DETAIL 11–C4.1
11. DRAINAGE STRUCTURE TYPE A–1 INLET, REF. DETAIL 1–C4.2
12. PIPE BOLLARD, REF. DETAIL 1–C4.5
13. 90° STANDARD PARKING SPACE, REF. DETAIL 1–C4.4
14. 90° VAN ACCESSIBLE PARKING SPACE, REF. DETAIL 2–C4.4
15. PAINTED ISLAND, REF. DETAIL 4–C4.4
16. PAINTED CROSS WALK, REF. DETAIL 9–C4.4
17. STOP BAR, REF. DETAIL 5–C4.4
18. STOP SIGN, REF. DETAIL 7–C4.4
19. PROJECT LIMIT LINE
20. DECORATIVE CONCRETE BOLLARD, REF. DETAIL 3–C4.5
21. RIP–RAP SWALE, REF. DETAIL 4–C4.5
22. TUBULAR BARRIER GATE, REF. DETAIL 10–C4.4
23. PAVEMENT BUTT JOINT, REF. DETAIL 15–C4.1
24. BITUMINOUS RESURFACING, REF. DETAIL 16–C4.1
25. CONCRETE CURB AND GUTTER, TYPE B–6.18, REF. DETAIL 7–C4.1
26. TRENCH DRAIN, REF. DETAIL 7–C4.2
27. 5' GUTTER TRANSITION, REF. DETAIL 13–C4.1
28. 4' CURB OPENING, REF. DETAIL 12–C4.1
29. LANDSCAPED INFILTRATION BASIN, REF. DETAIL 6–C4.5
30. SITE LIGHTING – DESIGN TO BE COMPLETED BY CONTRACTOR

PLAN NOTES

1. A PORTION OF THIS SITE WAS THE SUBJECT OF AN ALABAMA DEPARTMENT OF ENVIRONMENTAL MANAGEMENT (ADEM) SITE INVESTIGATION DUE TO CONTAMINATION FROM AN ABANDONED AVIATION GAS (AVGAS) DISTRIBUTION SYSTEM. THE INVESTIGATION HAS DETERMINED THAT THE SITE CONTAMINATION HAS BEEN SUFFICIENTLY MITIGATED TO CONSTRUCT THE IMPROVEMENTS PROPOSED. THE FOLLOWING DOCUMENTATION REGARDING THE MITIGATION IS AVAILABLE FOR REVIEW, UPON REQUEST:
   - ADEM FINAL RISK ASSESSMENT FOR AVGAS SYSTEM SITE (DEC 1996).
   - ALABAMA UST SECONDARY INVESTIGATION REPORT FOR THE AVGAS SYSTEM (DEC 1996).
   - GEOPROBE INVESTIGATION REPORT, GUNTER COMMISSARY (16 JUL 2010).
   - HISTORIC SITE UTILITY PLANS FOR THE AVGAS DISTRIBUTION SYSTEM.
2. THE CONTRACTOR MUST CONTACT THE ALABAMA DEPARTMENT OF ENVIRONMENTAL MANAGEMENT (ADEM) AT LEAST TWO WEEKS PRIOR TO MOBILIZING ON THE SITE. CONTACT PERSON: MS. KRISTY WRIGHT – KWG@ADEM.STATE.AL.US (334/271–7782).
3. THE CONTRACTOR MUST HAVE A REPRESENTATIVE ON–SITE THAT HAS COMPLETED THE ALABAMA DEPARTMENT OF ENVIRONMENTAL MANAGEMENT QUALIFIED CREDENTIALED INSPECTION PROGRAM (QCIP).

SYMBOL LEGEND

- THICKENED EDGE SIDEWALK
- HEAVY DUTY PAVEMENT
- CONCRETE LOADING AREA PAVEMENT
- BITUMINOUS OVER LAY
- * MEASURED TO BACK–OF–CURB

SYM.	D.O. NO.	ACTION	DATE	DESCRIPTION OF REVISION

DEFENSE COMMISSARY AGENCY
DIRECTORATE OF PERFORMANCE & POLICY
FORT LEE, VIRGINIA
LACKLAND AFB, TEXAS

DESIGNED BY: ---
DRAWN BY: ---
REVIEWED BY: ---

DESIGN/BUILD NEW COMMISSARY

SITE LAYOUT PLAN

MAXWELL A.F.B. – GUNTER ANNEX, ALABAMA

SUBMITTED BY:
ENGINEER:

SOL. NO.
DATE: 01 AUG 2011
PROJECT NO. DE04MP05
DRAWING NUMBER
SHEET NO. OF
SEQUENCE NO. C3.1

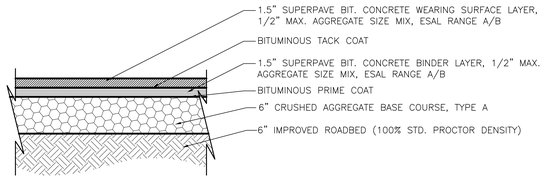

1 C3.1 | C4.1 PARKING AREA PAVING
NOT TO SCALE

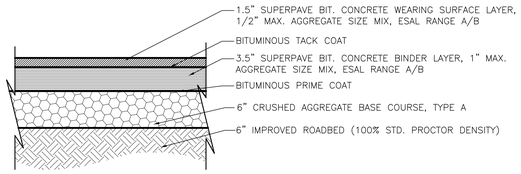

2 C3.1 | C4.1 HEAVY DUTY PAVING
NOT TO SCALE

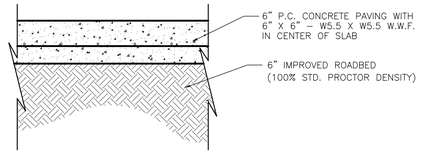

3 C3.1 | C4.1 LOADING AREA PAVING
NOT TO SCALE

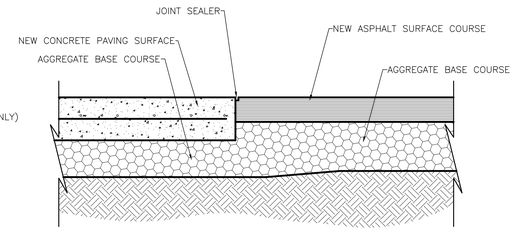

4 C3.1 | C4.1 NEW ASPHALT AT NEW CONCRETE
NOT TO SCALE

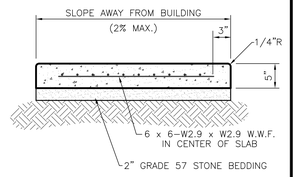

5 C3.1 | C4.1 CONCRETE SIDEWALK
NOT TO SCALE

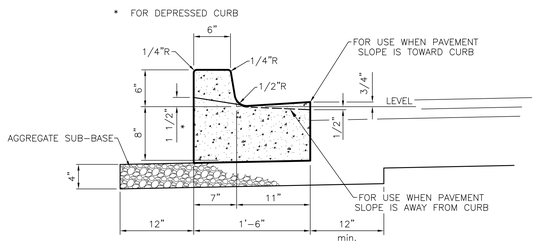

NOTE: EXPANSION JOINTS AT 60' CENTERS AND CONTROL JOINTS AT 20' CENTERS. USE NO JOINT SEALER.

6 C3.1 | C4.1 BARRIER CONCRETE CURB AND GUTTER TYPE B–6.12
NOT TO SCALE

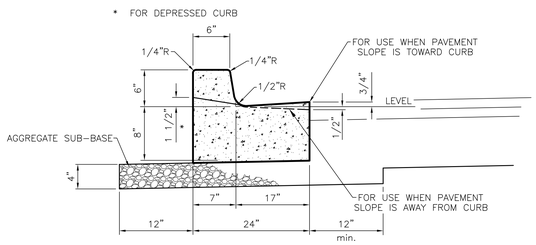

NOTE: EXPANSION JOINTS AT 60' CENTERS AND CONTROL JOINTS AT 20' CENTERS. USE NO JOINT SEALER.

7 C3.1 | C4.1 BARRIER CONCRETE CURB AND GUTTER TYPE B–6.18
NOT TO SCALE

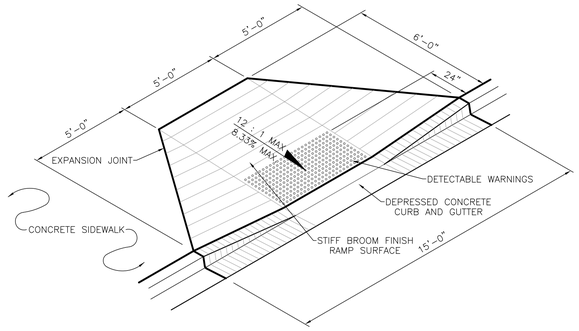

8 C3.1 | C4.1 SIDEWALK RAMP, TYPE A
NOT TO SCALE

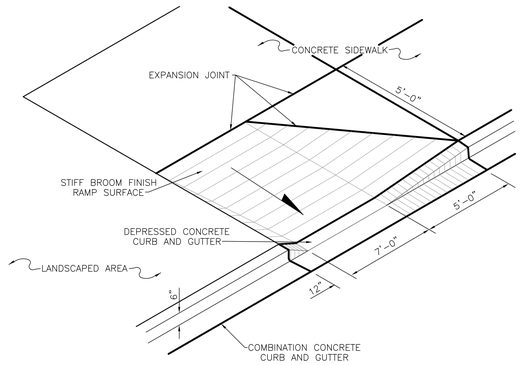

9 C3.1 | C4.1 FORKLIFT RAMP
NOT TO SCALE

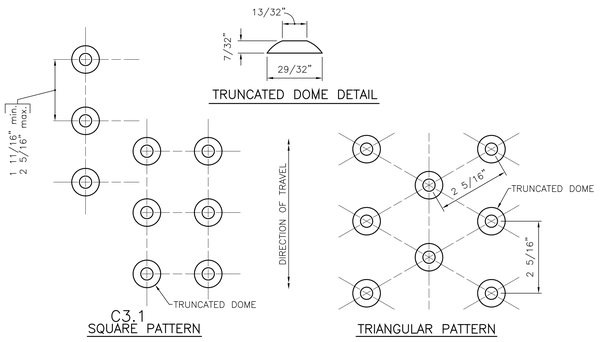

10 C4.1 DETECTABLE WARNING
NOT TO SCALE

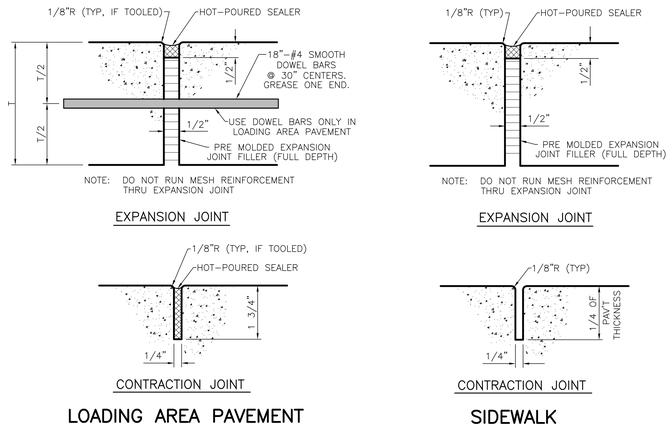

LOADING AREA PAVEMENT JOINTS MAY BE TOOLED OR SAW CUT, SIDEWALK JOINTS MUST BE TOOLED.

11 C3.1 | C4.1 CONCRETE JOINT DETAILS
NOT TO SCALE

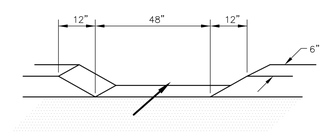

12 C3.1 | C4.1 CURB OPENING
NOT TO SCALE

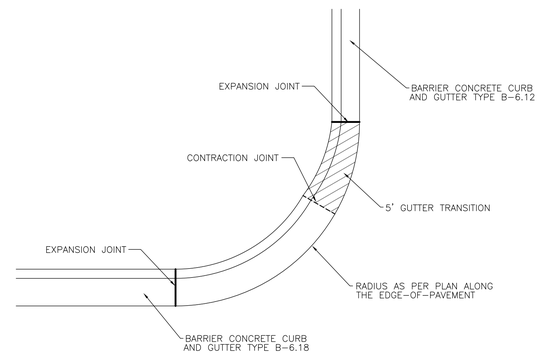

13 C3.1 | C4.1 GUTTER TRANSITION
NOT TO SCALE

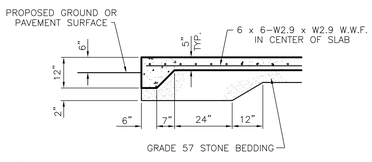

14 C3.1 | C4.1 THICKENED EDGE SIDEWALK
NOT TO SCALE

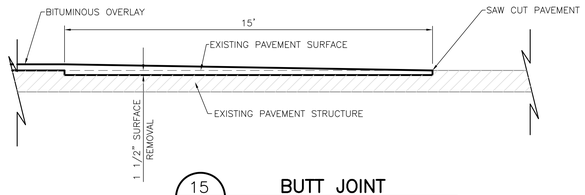

15 C3.1 | C4.1 BUTT JOINT
NOT TO SCALE

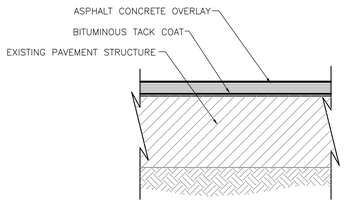

16 C3.1 | C4.1 BITUMINOUS RESURFACING
NOT TO SCALE

SYM.	D.O. NO.	ACTION	DATE	DESCRIPTION OF REVISION

DEFENSE COMMISSARY AGENCY
DIRECTORATE OF PERFORMANCE & POLICY
FORT LEE, VIRGINIA
LACKLAND AFB, TEXAS

DESIGNED BY: ---
DRAWN BY: ---
REVIEWED BY: ---

DESIGN/BUILD NEW COMMISSARY

SITE DETAILS

MAXWELL A.F.B. – GUNTER ANNEX, ALABAMA

SUBMITTED BY:
ENGINEER:

SOL. NO.
DATE: 01 AUG 2011
PROJECT NO. DEOPMPOS
DRAWING NUMBER
SHEET NO. OF
SEQUENCE NO. C4.1

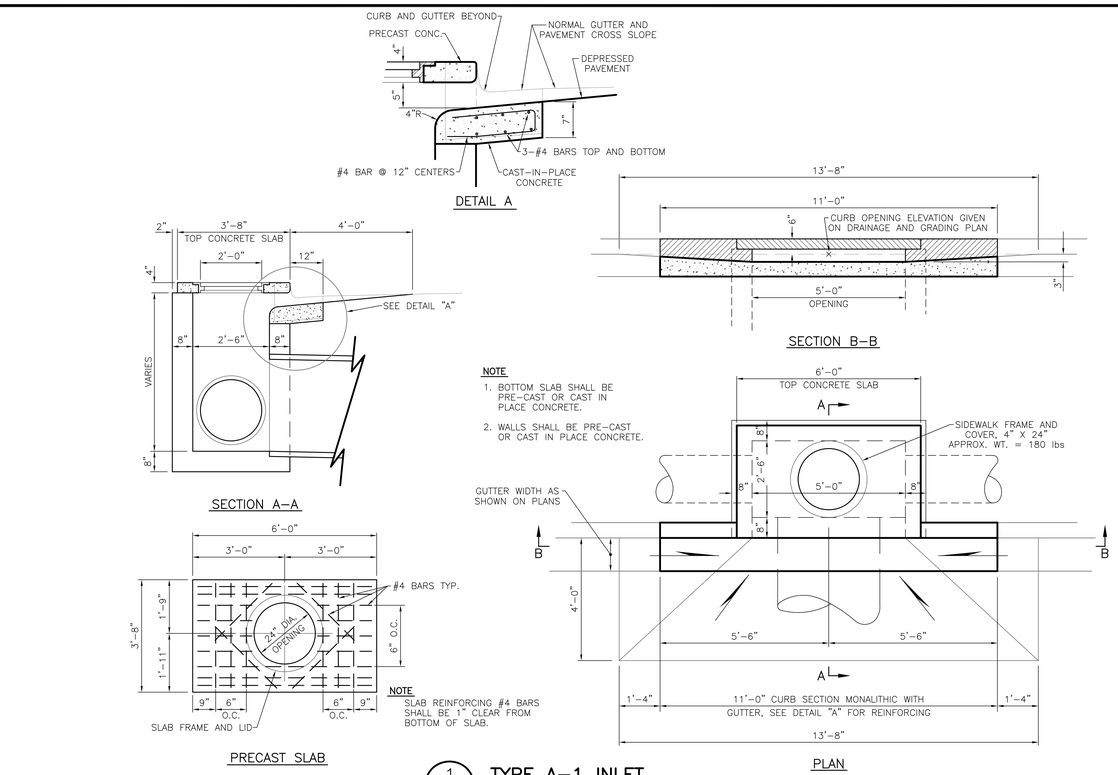

1 TYPE A-1 INLET
C6.1 | C4.2 NOT TO SCALE

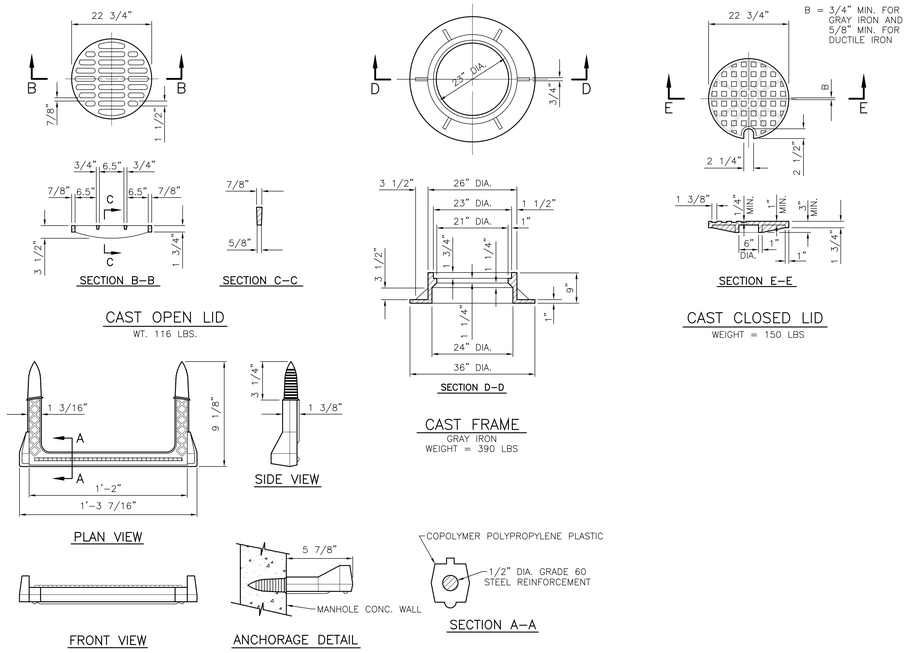

2 FRAME AND LIDS
C6.1 | C4.2 NOT TO SCALE

NOTES

1. * DIMENSION "C" FOR PRECAST REINFORCED CONCRETE SECTIONS MAY VARY FROM THE DIMENSIONS GIVEN TO PLUS 6".
2. ** THE REINFORCED PLASTIC STEPS AS DETAILED HEREIN ARE TYPICAL. STEPS OF OTHER DESIGN AND MATERIAL THAT WILL CONFORM TO THE MINIMUM REQUIREMENTS OF THE STEPS SHOWN, MAY BE USED WHEN APPROVED BY THE ENGINEER.
3. STEPS SHALL BE EMBEDDED INTO THE WALL A MINIMUM OF 3". STEPS SHALL NOT BE EXTENDED ON THE OUTSIDE.

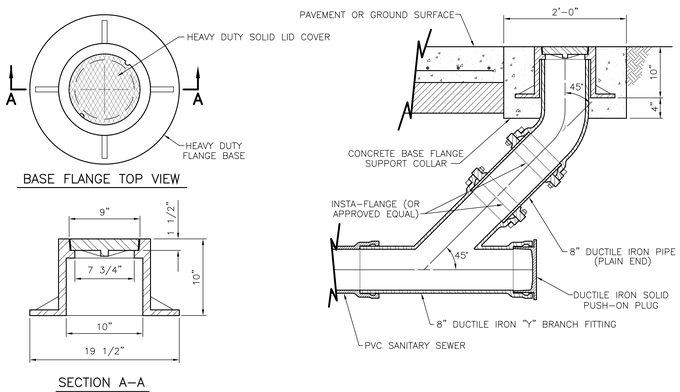

3 CLEAN-OUT
C6.1 | C4.2 NOT TO SCALE

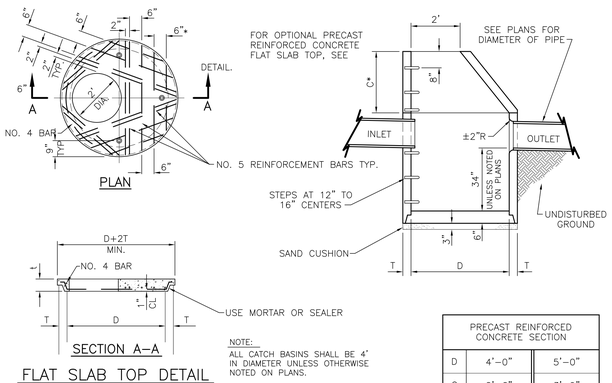

NOTE:
ALL CATCH BASINS SHALL BE 4' IN DIAMETER UNLESS OTHERWISE NOTED ON PLANS.

PRECAST REINFORCED CONCRETE SECTION		
D	4'-0"	5'-0"
C	2'-6"	3'-9"
T	4"	5"
t	6"	8"

4 CATCH BASIN
C6.1 | C4.2 NOT TO SCALE

PRECAST REINFORCED CONCRETE SECTION		
D	4'-0"	5'-0"
C	2'-6"	3'-9"
T	4"	5"

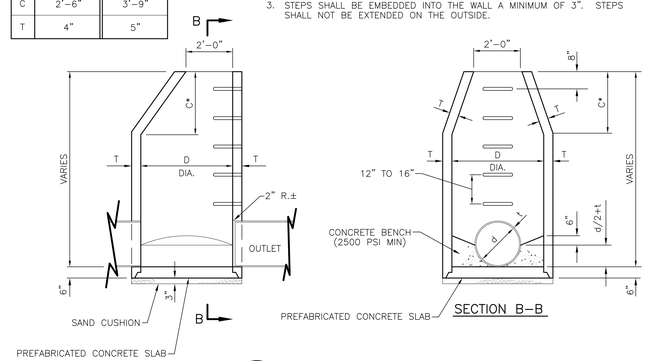

5 MANHOLE
C6.1 | C4.2 NOT TO SCALE

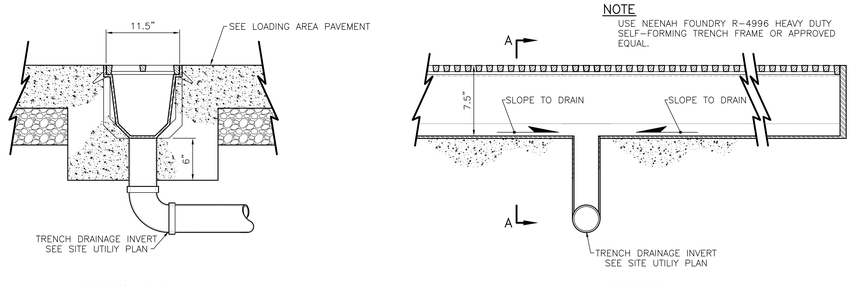

7 TRENCH DRAIN - BOTTOM OUTLET
C6.1 | C4.2 NOT TO SCALE

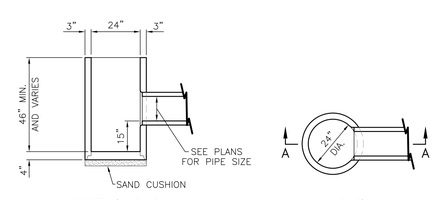

8 2' DIA. CATCH BASIN
C6.1 | C4.2 NOT TO SCALE

SYM.	D.O. NO.	ACTION	DATE	DESCRIPTION OF REVISION

DEFENSE COMMISSARY AGENCY
DIRECTORATE OF PERFORMANCE & POLICY
FORT LEE, VIRGINIA
LACKLAND AFB, TEXAS

DESIGNED BY: ---
DRAWN BY: ---
REVIEWED BY: ---

DESIGN/BUILD NEW COMMISSARY

SITE DETAILS

MAXWELL A.F.B. - GUNTER ANNEX, ALABAMA

SUBMITTED BY:
ENGINEER:

SOL. NO.
DATE: 01 AUG 2011
PROJECT NO. DE04MP05
DRAWING NUMBER
SHEET NO. OF
SEQUENCE NO. C4.2

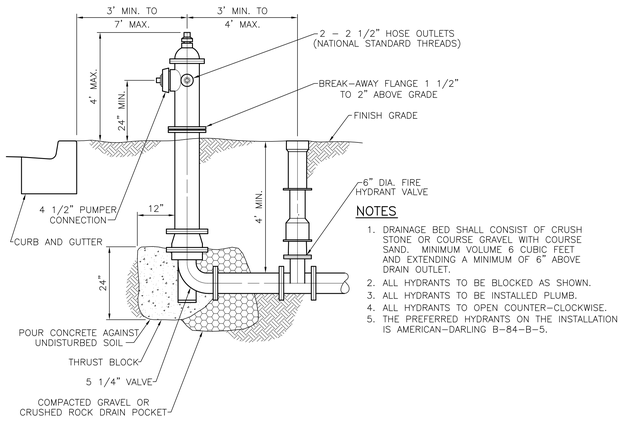

NOTES

1. DRAINAGE BED SHALL CONSIST OF CRUSH STONE OR COURSE GRAVEL WITH COURSE SAND. MINIMUM VOLUME 6 CUBIC FEET AND EXTENDING A MINIMUM OF 6" ABOVE DRAIN OUTLET.
2. ALL HYDRANTS TO BE BLOCKED AS SHOWN.
3. ALL HYDRANTS TO BE INSTALLED PLUMB.
4. ALL HYDRANTS TO OPEN COUNTER-CLOCKWISE.
5. THE PREFERRED HYDRANTS ON THE INSTALLATION IS AMERICAN-DARLING B-84-B-5.

1 FIRE HYDRANT
C6.1 | C4.3 NOT TO SCALE

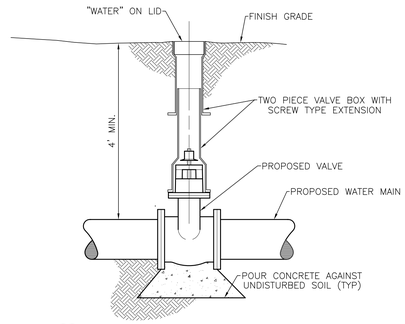

2 VALVE IN VALVE BOX
C6.1 | C4.3 NOT TO SCALE

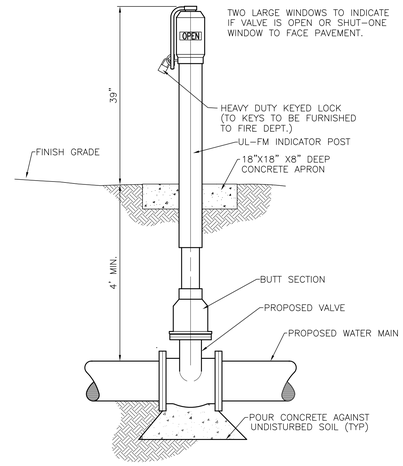

3 POST INDICATOR VALVE
C6.1 | C4.3 NOT TO SCALE

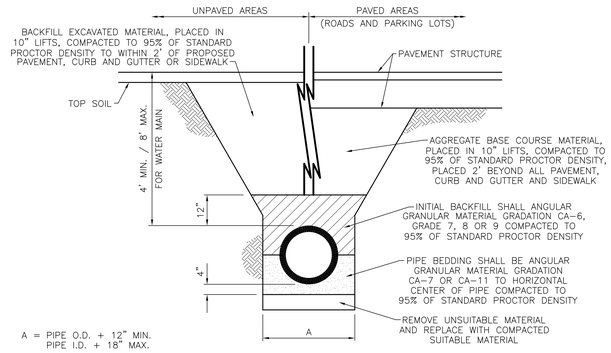

4 TRENCH DETAIL FOR PVC PIPE
C6.1 | C4.3 NOT TO SCALE

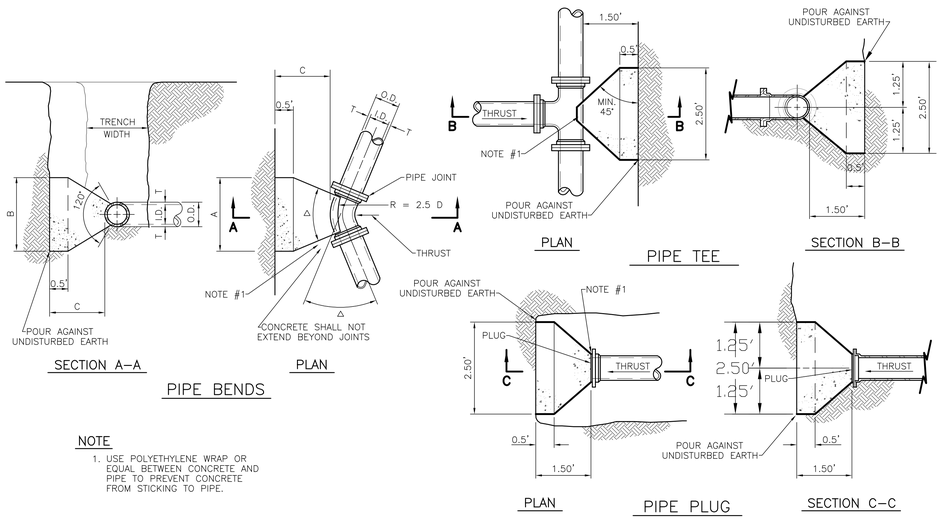

NOTE

1. USE POLYETHYLENE WRAP OR EQUAL BETWEEN CONCRETE AND PIPE TO PREVENT CONCRETE FROM STICKING TO PIPE.

				Δ = 11.25°				Δ = 22.50°				Δ = 45°				Δ = 90°			
I.D. (IN.)	T (IN.)	O.D. (IN.)	C (FT.)	A (FT.)	B (FT.)	VOL. (C.Y.)	THRUST TONS	A (FT.)	B (FT.)	VOL. (C.Y.)	THRUST TONS	A (FT.)	B (FT.)	VOL. (C.Y.)	THRUST TONS	A (FT.)	B (FT.)	VOL. (C.Y.)	THRUST TONS
4	0.52	5.04	1.50	1.00	1.50	0.10	1.0	1.50	1.50	0.10	2.0	2.00	2.00	0.20	3.9	5.00	1.50	0.40	7.1
6	0.55	7.10	1.50	1.00	1.50	0.10	1.0	1.50	1.50	0.10	2.0	2.00	2.00	0.20	3.9	5.00	1.50	0.40	7.1
8	0.60	9.20	1.50	1.00	1.50	0.10	1.0	1.50	1.50	0.10	2.0	2.00	2.00	0.20	3.9	5.00	1.50	0.40	7.1

5 THRUST BLOCKS
C6.1 | C4.3 NOT TO SCALE

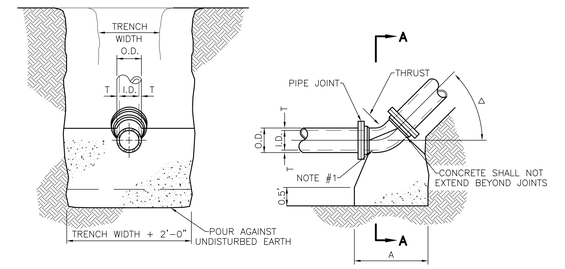

UPWARD PIPE BENDS

NOTE

1. USE POLYETHYLENE WRAP OR EQUAL BETWEEN CONCRETE AND PIPE TO PREVENT CONCRETE FROM STICKING TO PIPE.
2. TIE RODS SHALL BE DEFORMED GALVANIZED COLD-ROLLED STEEL (MINIMUM 40 KSI T.S.).

	Δ = 11.25°		Δ = 22.50°		Δ = 45°	
I.D. (IN.)	THRUST TONS	VOL. (C.Y.)	THRUST TONS	VOL. (C.Y.)	THRUST TONS	VOL. (C.Y.)
4	1.0	0.5	1.0	0.5	1.6	0.8
6	1.0	0.5	1.7	0.8	3.2	1.6
8	1.5	0.7	2.8	1.4	5.5	2.8
10	2.2	1.1	4.3	2.1	8.4	4.1
12	3.0	1.5	6.0	3.0	11.8	5.8

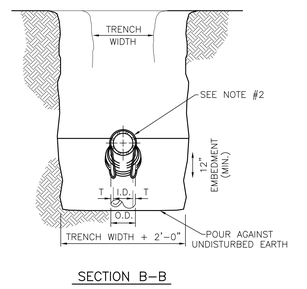

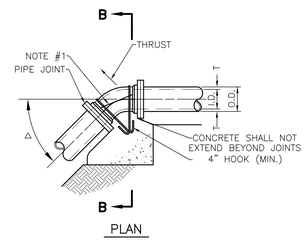

DOWNWARD PIPE BENDS

6 VERTICAL THRUST BLOCKS
C6.1 | C4.3 NOT TO SCALE

SYM.	D.O. NO.	ACTION	DATE	DESCRIPTION OF REVISION

DEFENSE COMMISSARY AGENCY
DIRECTORATE OF PERFORMANCE & POLICY
FORT LEE, VIRGINIA
LACKLAND AFB, TEXAS

DESIGNED BY: ---
DRAWN BY: ---
REVIEWED BY: ---

DESIGN/BUILD NEW COMMISSARY

SITE DETAILS

MAXWELL A.F.B. – GUNTER ANNEX, ALABAMA

SUBMITTED BY:
ENGINEER:

SOL. NO.
DATE: 01 AUG 2011
PROJECT NO. DEC8MP05
DRAWING NUMBER
SHEET NO. OF
SEQUENCE NO. C4.3

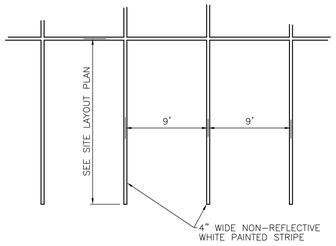

NOTE: 2 COATS OF PAINT ON ALL PAVEMENT MARKINGS

1 C3.1|C4.4 **90° STANDARD PARKING SPACE**
NOT TO SCALE

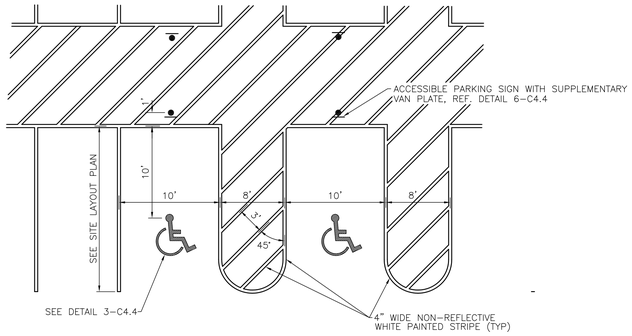

NOTE: 2 COATS OF PAINT ON ALL PAVEMENT MARKINGS

2 C3.1|C4.4 **90° VAN ACCESSIBLE PARKING SPACE**
NOT TO SCALE

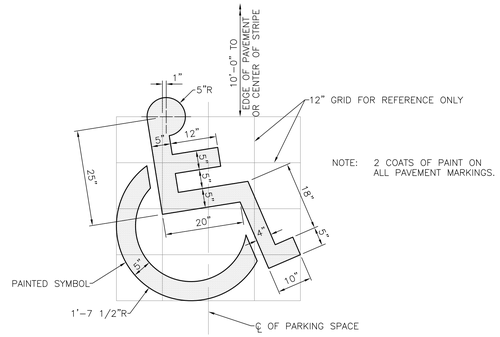

NOTE: 2 COATS OF PAINT ON ALL PAVEMENT MARKINGS.

3 C3.1|C4.4 **HANDICAP SYMBOL**
NOT TO SCALE

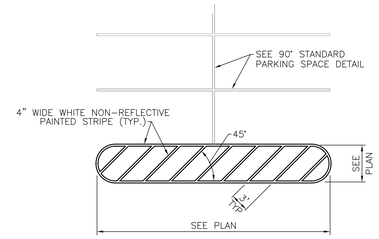

NOTE: 2 COATS OF PAINT ON ALL PAVEMENT MARKINGS

4 C3.1|C4.4 **90° PAINTED ISLAND**
NOT TO SCALE

NOTE: 2 COATS OF REFLECTORIZED PAINT

5 C3.1|C4.4 **STOP BAR**
NOT TO SCALE

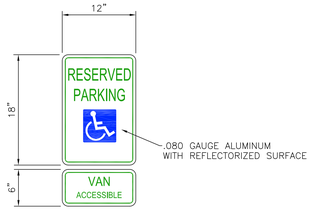

NOTES:
1. ALL SIGNAGE SHALL BE IN ACCORDANCE WITH THE MANUAL ON UNIFORM TRAFFIC CONTROL DEVICES LATEST EDITION
2. BOTTOM OF SIGN SHALL BE MOUNTED 5'-0" ABOVE PAVEMENT, SEE REF. DETAIL 8-C4.4 FOR SIGN MOUNTING

6 C3.1|C4.4 **ACCESSIBLE PARKING SIGN WITH SUPPLEMENTARY VAN PLATE**
NOT TO SCALE

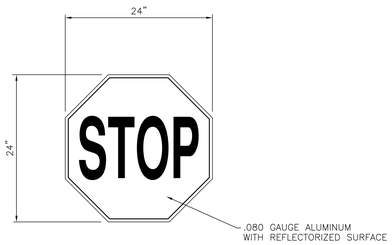

NOTES:
1. ALL SIGNAGE SHALL BE IN ACCORDANCE WITH THE MANUAL ON UNIFORM TRAFFIC CONTROL DEVICES LATEST EDITION
2. BOTTOM OF SIGN SHALL BE MOUNTED 7'-0" ABOVE PAVEMENT, SEE DETAIL 8-C4.4 FOR SIGN MOUNTING

7 C3.1|C4.4 **STOP SIGN**
NOT TO SCALE

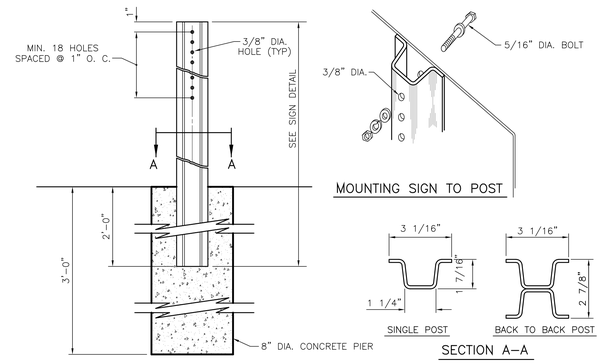

8 C3.1|C4.4 **SIGN POST AND SIGN MOUNTING**
NOT TO SCALE

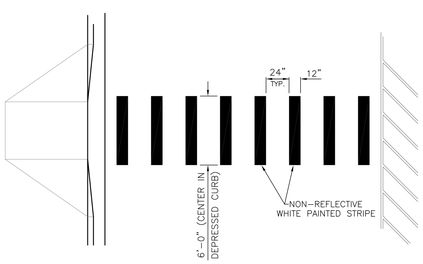

9 C3.1|C4.4 **PAINTED CROSS WALK**
NOT TO SCALE

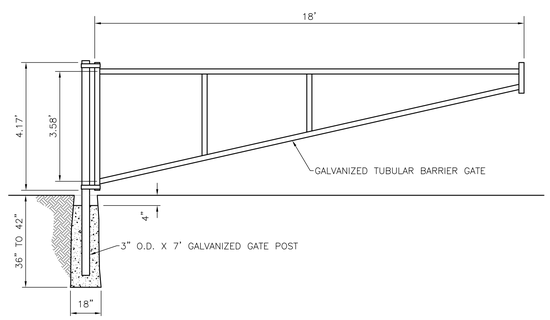

10 C3.1|C4.4 **TUBULAR BARRIER GATE**
NOT TO SCALE

SYM.	D.O. NO.	ACTION	DATE	DESCRIPTION OF REVISION

DEFENSE COMMISSARY AGENCY
DIRECTORATE OF PERFORMANCE & POLICY
FORT LEE, VIRGINIA
LACKLAND AFB, TEXAS

DESIGNED BY: ---
DRAWN BY: ---
REVIEWED BY: ---
SUBMITTED BY:
ENGINEER:

DESIGN/BUILD NEW COMMISSARY

SITE DETAILS

MAXWELL A.F.B. – GUNTER ANNEX, ALABAMA

SOL. NO.
DATE: 01 AUG 2011
PROJECT NO. DE04MP05
DRAWING NUMBER
SHEET NO. OF
SEQUENCE NO. C4.4

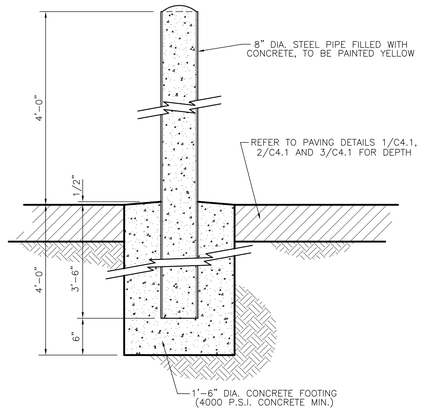

1 PIPE BOLLARD
C3.1 | C4.5
NOT TO SCALE

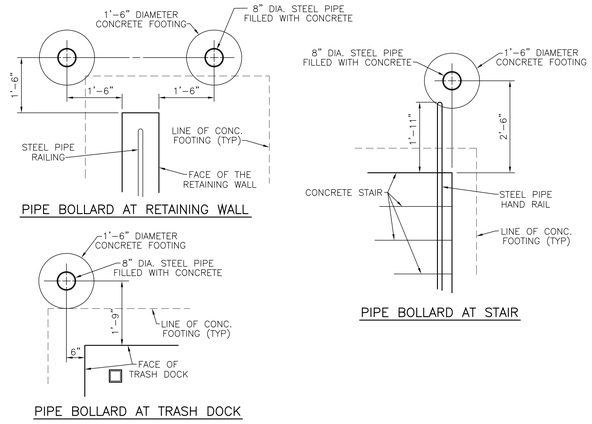

2 PIPE BOLLARD LOCATIONS
C3.1 | C4.5
NOT TO SCALE

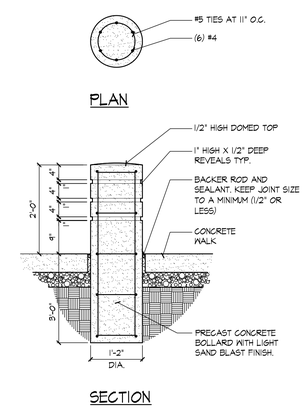

3 DECORATIVE CONCRETE BOLLARD
C3.1 | C4.5
NOT TO SCALE

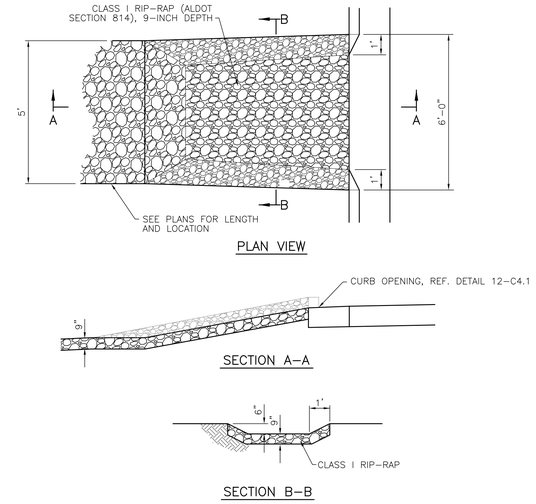

4 CURB DRAINAGE OUTLET AND RIP-RAP SWALE
C5.1 | C4.5
NOT TO SCALE

PIPE DIA.	APPROX. QTY. LBS.	WALL	A	B	C	D	E	G	R	APPROX. SLOPE
15"	740	2 1/4"	6"	2'-3"	3'-10"	6'-1"	2'-6"	2 1/4"	11"	2.4 : 1
18"	990	2 1/2"	9"	2'-3"	3'-10"	6'-1"	3'-0"	2 1/2"	12"	2.4 : 1

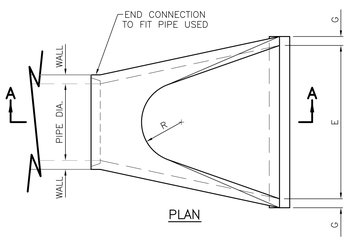

NOTES

1. PRECAST CONCRETE FLARED END SECTION SHALL CONFORM TO THE APPLICABLE REQUIREMENTS OF A.A.S.H.T.O. M-170 CLASS III, WALL B REINFORCED CONCRETE PIPE.
2. REQUIRED PIPE DIAMETER INDICATED ON UTILITY PLAN FOR EACH INDIVIDUAL INSTALLATION.

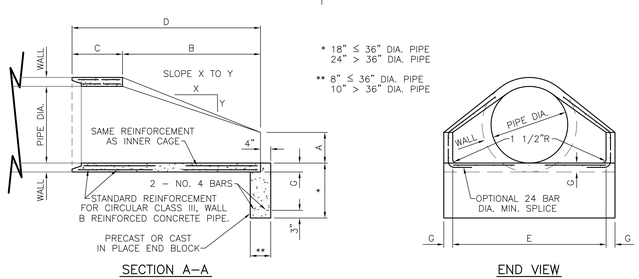

5 PRECAST REINFORCED CONCRETE FLARED END SECTION
C6.1 | C4.5
NOT TO SCALE

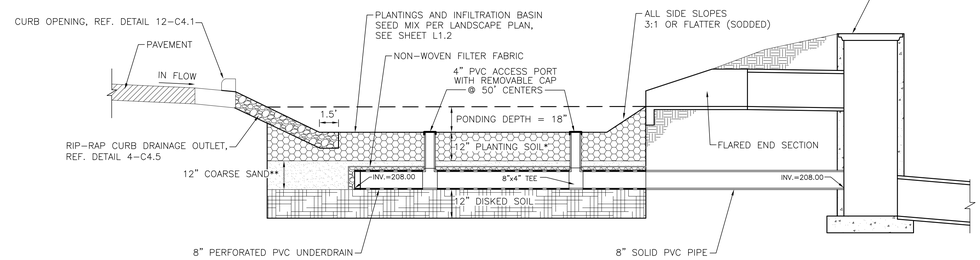

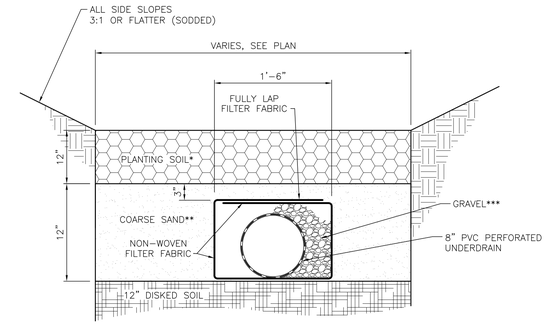

* PLANTING SOIL: USDA SOIL TYPES LOAMY SAND OR SANDY LOAM, CLAY CONTENT <5%

** COARSE SAND: MATERIAL CONFORMING TO ALDOT SIZE NO. 100 FOR FINE AGGREGATE WITH NO MORE THAN 3% PASSING THE NO. 200 SIEVE. (ARTICLE 801.11)

*** GRAVEL: MATERIAL CONFORMING TO ALDOT GRADATION NO. 57 FOR COARSE AGGREGATE (ARTICLE 802.09)

6 INFILTRATION BASIN
C5.1 | C4.5
NOT TO SCALE

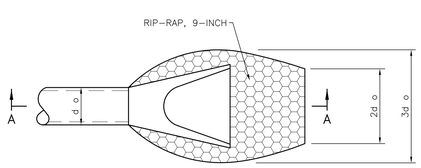

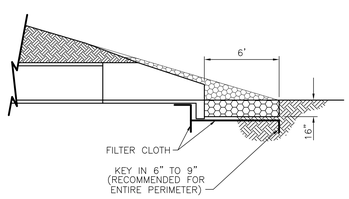

7 RIP-RAP OUTLET
C6.1 | C4.5
NOT TO SCALE

SYM.	D.O. NO.	ACTION	DATE	DESCRIPTION OF REVISION

DEFENSE COMMISSARY AGENCY
DIRECTORATE OF PERFORMANCE & POLICY
FORT LEE, VIRGINIA
LACKLAND AFB, TEXAS

DESIGNED BY: ---
DRAWN BY: ---
REVIEWED BY: ---

DESIGN/BUILD NEW COMMISSARY

SITE DETAILS

MAXWELL A.F.B. - GUNTER ANNEX, ALABAMA

SUBMITTED BY:
ENGINEER:

SOL. NO.
DATE: 01 AUG 2011
PROJECT NO. DE0RMP05
DRAWING NUMBER
SHEET NO. OF
SEQUENCE NO. C4.5

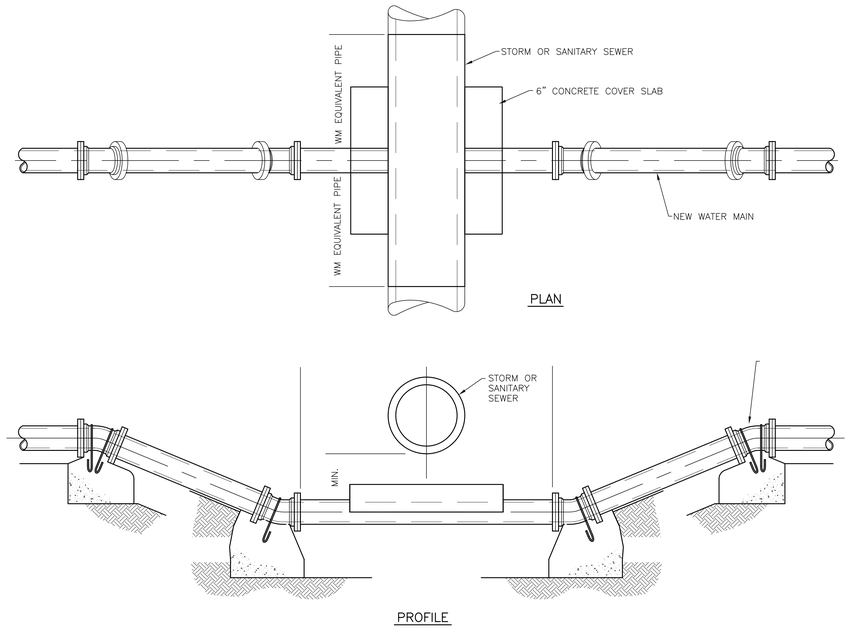

1 WATER MAIN LOWERING DETAIL
C6.1 | C4.6
NOT TO SCALE

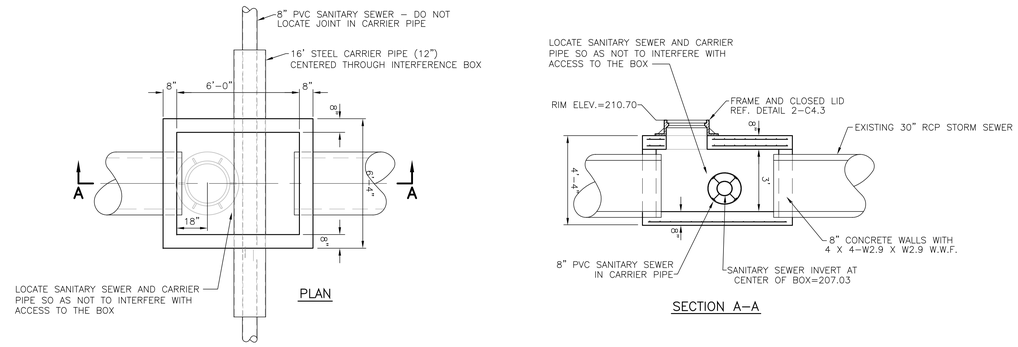

2 INTERFERENCE BOX
C6.1 | C4.6
NOT TO SCALE

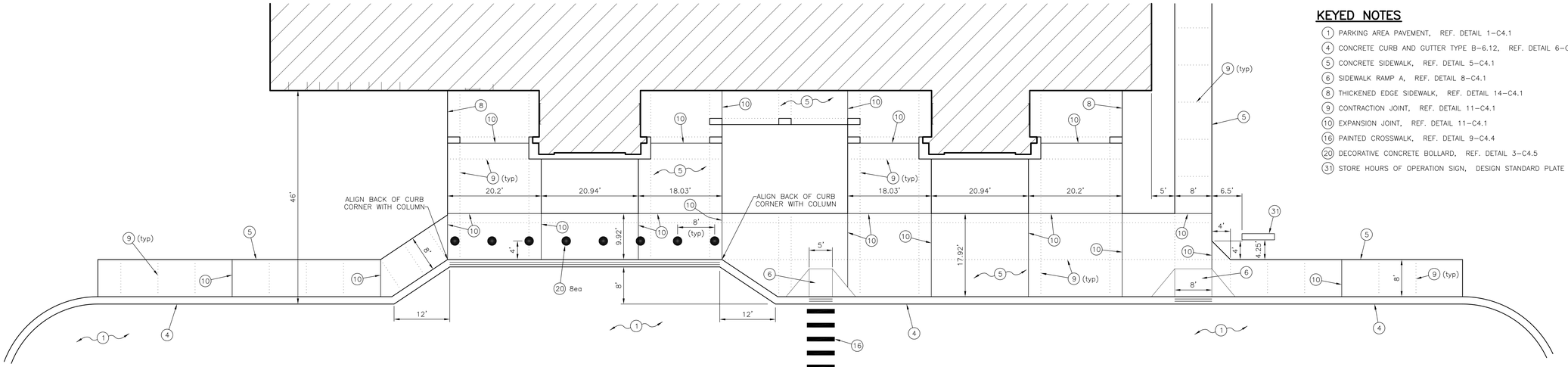

KEYED NOTES

1. PARKING AREA PAVEMENT, REF. DETAIL 1-C4.1
4. CONCRETE CURB AND GUTTER TYPE B-6.12, REF. DETAIL 6-C4.1
5. CONCRETE SIDEWALK, REF. DETAIL 5-C4.1
6. SIDEWALK RAMP A, REF. DETAIL 8-C4.1
8. THICKENED EDGE SIDEWALK, REF. DETAIL 14-C4.1
9. CONTRACTION JOINT, REF. DETAIL 11-C4.1
10. EXPANSION JOINT, REF. DETAIL 11-C4.1
16. PAINTED CROSSWALK, REF. DETAIL 9-C4.4
20. DECORATIVE CONCRETE BOLLARD, REF. DETAIL 3-C4.5
31. STORE HOURS OF OPERATION SIGN, DESIGN STANDARD PLATE 10481-01

2 FRONT SIDEWALK DETAIL
C6.1 | C4.6
SCALE: 1"=10'

SYM.	D.O. NO.	ACTION	DATE	DESCRIPTION OF REVISION

DEFENSE COMMISSARY AGENCY
DIRECTORATE OF PERFORMANCE & POLICY
FORT LEE, VIRGINIA
LACKLAND AFB, TEXAS

DESIGNED BY: ---
DRAWN BY: ---
REVIEWED BY: ---

DESIGN/BUILD NEW COMMISSARY

SITE DETAILS

MAXWELL A.F.B. – GUNTER ANNEX, ALABAMA

SUBMITTED BY:
ENGINEER:

SOL. NO.
DATE: 01 AUG 2011
PROJECT NO. DEC4MP05
DRAWING NUMBER
SHEET NO.
OF
SEQUENCE NO. C4.6

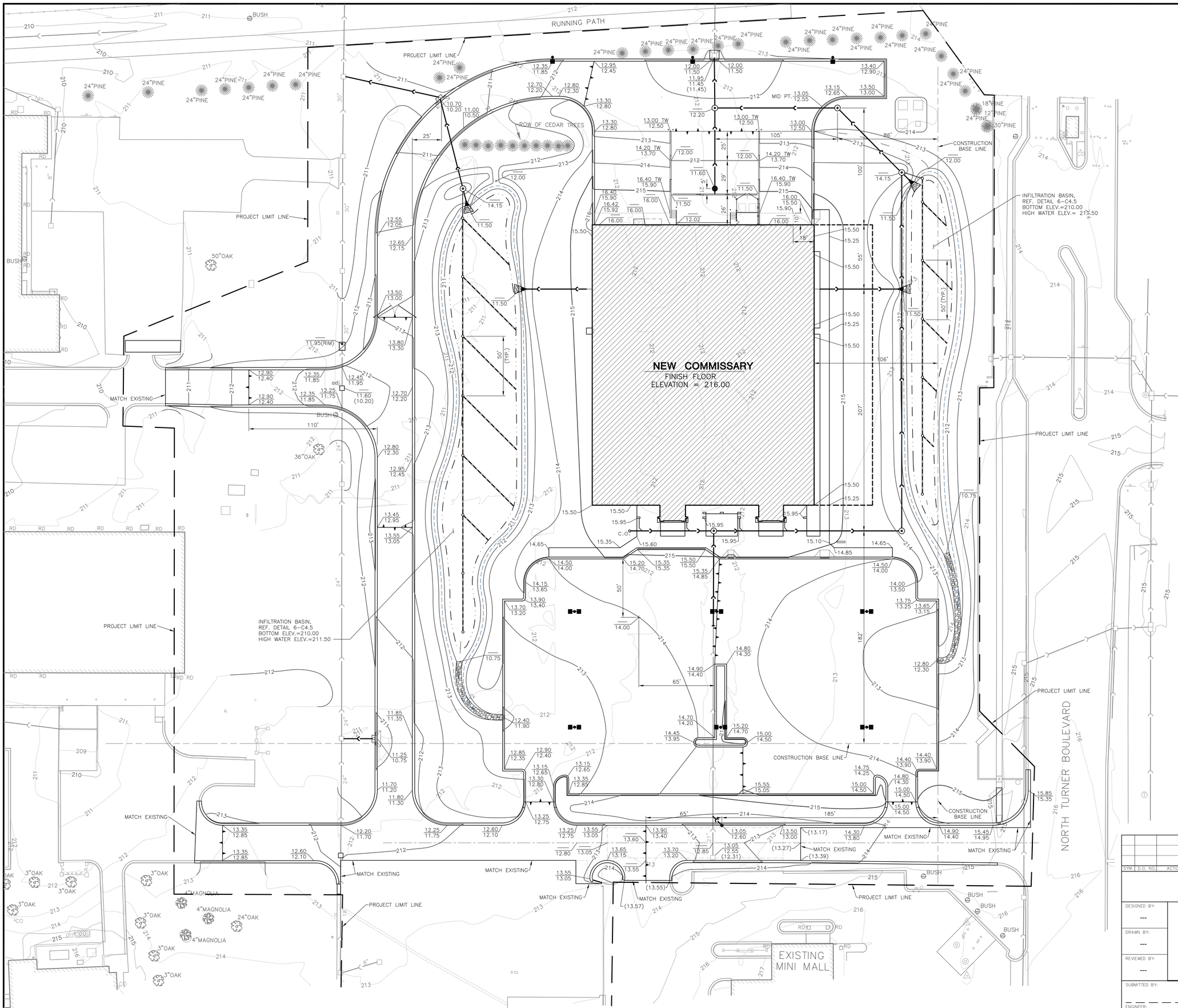

NORTH

GRAPHIC SCALE

(IN FEET)
1 inch = 30 ft.

NOTES

1. ADD 200 FEET TO ALL NEW SPOT ELEVATIONS TO OBTAIN USGS ELEVATIONS.
2. THE CONTRACTOR MUST PROVIDE AN INDIVIDUAL ON-SITE THAT HAS COMPLETED THE ALABAMA DEPARTMENT OF ENVIRONMENTAL MANAGEMENT (ADEM) QUALIFIED CREDENTIALED INSPECTION PROGRAM (QCIP).
3. A DRAFT CBMPP (THE ALABAMA VERSION OF A SWPPP) HAS BEEN PROVIDED AS PART OF THIS RFP. IT SHALL BE THE CONTRACTOR'S RESPONSIBILITY TO HIRE A LOCAL CIVIL ENGINEER TO COMPLETE AND CERTIFY THE CBMPP AND OBTAIN ALL NECESSARY APPROVAL FROM THE ALABAMA DEPARTMENT OF ENVIRONMENTAL MANAGEMENT.
4. THE CONTRACTOR MUST CONTACT MS. KRISTI WRIGHT (ADEM) AT KGW@ADEM.STATE.AL.US (PHONE: 334/271-7782) AT LEAST TWO WEEKS PRIOR MOBILIZING ON THE SITE.

SYMBOL LEGEND

- EXISTING DECIDUOUS TREE
- EXISTING CONIFER TREE
- EXISTING DRAINAGE STRUCTURE
- EXISTING MANHOLE
- EXISTING STORM SEWER
- 353 EXISTING MINOR (1') CONTOUR LINE
- 355 EXISTING MAJOR (5') CONTOUR LINE
- NEW 4' DIA. CATCH BASIN, REF DETAIL 4-C4.2
- NEW 2' DIA. CATCH BASIN, REF DETAIL 8-C4.2
- NEW MANHOLE, REF. DETAIL 5-C4.2
- NEW TRENCH DRAIN, REF. DETAIL 4-C4.2
- NEW INTERFERENCE BOX, REF. DETAIL 7-C4.3
- C.O. NEW CLEAN-OUT, REF. DETAIL 3-C4.2
- CURB DRAINAGE OUTLET, REF. DETAIL 4-C4.5
- 15.50 NEW SPOT ELEVATION
- 14.50 / 14.00 NEW TOP OF CURB ELEVATION / NEW EDGE OF PAVEMENT ELEVATION
- NEW DRAINAGE DIVIDE
- (10.20) EXISTING SPOT ELEVATION
- TW TOP OF WALL ELEVATION
- NEW STORM SEWER
- 353 NEW MINOR (1') CONTOUR LINE
- 355 NEW MAJOR (5') CONTOUR LINE
- NEW SWALE LINE
- A ADJUST RIM ELEVATION OF EXISTING DRAINAGE STRUCTURE
- CONCRETE FLARED END SECTION WITH RIP-RAP REF. DETAIL 7-C4.5
- 4" PVC ACCESS PORT WITH REMOVABLE CAP, REF. DETAIL 6-C4.5
- 8" PERFORATED PVC UNDERDRAIN IN GRAVEL TRENCH REF. DETAIL 6-C4.5
- RIP-RAP SWALE, REF. DETAIL 4-C4.5

SYM.	D.O. NO.	ACTION	DATE	DESCRIPTION OF REVISION

DEFENSE COMMISSARY AGENCY
DIRECTORATE OF PERFORMANCE & POLICY
FORT LEE, VIRGINIA
LACKLAND AFB, TEXAS

DESIGNED BY: ---
DRAWN BY: ---
REVIEWED BY: ---

DESIGN/BUILD NEW COMMISSARY

SITE DRAINAGE AND GRADING PLAN

MAXWELL A.F.B. – GUNTER ANNEX, ALABAMA

SUBMITTED BY:
ENGINEER:

SOL. NO.
DATE: 01 AUG 2011
PROJECT NO. DE04MP05
DRAWING NUMBER
SHEET NO. OF
SEQUENCE NO. C5.1

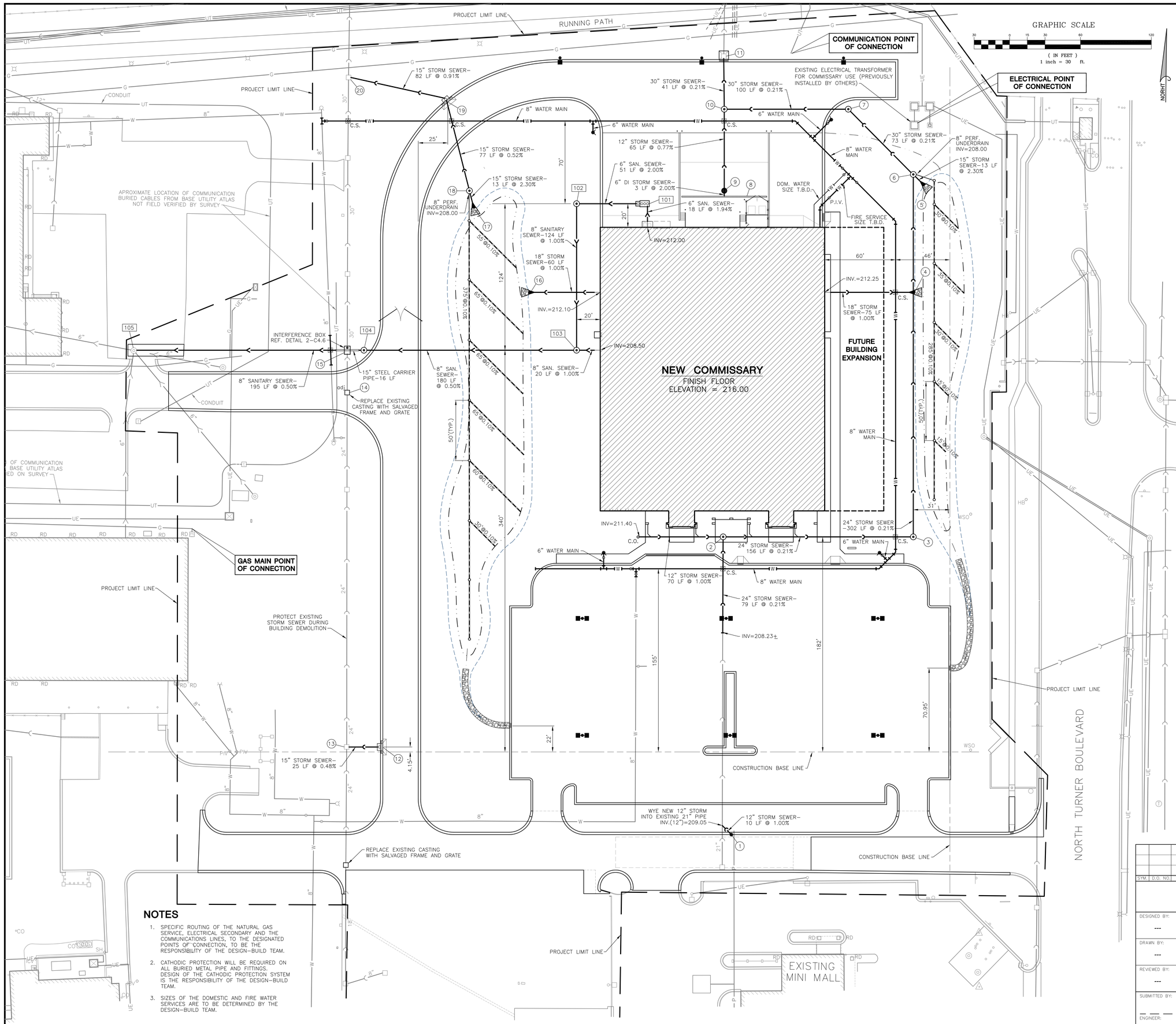

NOTES

1. SPECIFIC ROUTING OF THE NATURAL GAS SERVICE, ELECTRICAL SECONDARY AND THE COMMUNICATIONS LINES, TO THE DESIGNATED POINTS OF CONNECTION, TO BE THE RESPONSIBILITY OF THE DESIGN-BUILD TEAM.
2. CATHODIC PROTECTION WILL BE REQUIRED ON ALL BURIED METAL PIPE AND FITTINGS. DESIGN OF THE CATHODIC PROTECTION SYSTEM IS THE RESPONSIBILITY OF THE DESIGN-BUILD TEAM.
3. SIZES OF THE DOMESTIC AND FIRE WATER SERVICES ARE TO BE DETERMINED BY THE DESIGN-BUILD TEAM.

SYMBOL LEGEND

- EXISTING CATCH BASIN
- EXISTING MANHOLE
- EXISTING FIRE HYDRANT
- EXISTING VALVE BOX
- EXISTING STORM SEWER
- EXISTING SANITARY SEWER
- W — EXISTING WATER MAIN
- UE — EXISTING UNDERGROUND ELECTRIC
- UT — EXISTING UNDERGROUND TELEPHONE
- P — EXISTING PETROLEUM LINE
- NEW 4' DIA. CATCH BASIN, REF. DETAIL 4-C4.2
- NEW 2' DIA. CATCH BASIN, REF. DETAIL 8-C4.2
- NEW MANHOLE, REF. DETAIL 5-C4.2
- C.O. NEW CLEAN-OUT, REF. DETAIL 3-C4.2
- NEW FLARED END SECTION, REF. DETAIL 5-C4.5
- NEW FIRE HYDRANT, REF. DETAIL 1-C4.3
- NEW VALVE IN VALVE BOX, REF. DETAIL 2-C4.3
- P.I.V. NEW POST INDICATOR VALVE, REF. DETAIL 3-C4.3
- NEW TYPE A-1 DRAINAGE STRUCTURE, REF. DETAIL 1-C4.2
- NEW STORM SEWER
- NEW SANITARY SEWER
- W NEW WATER MAIN
- NEW TRENCH DRAIN, REF. DETAIL 7-C4.2
- NEW GREASE TRAP
- C.S. NEW 6" CONCRETE COVER SLAB, REF. DETAIL 1-C4.6
- NEW SWALE LINE
- adj ADJUST EXISTING DRAINAGE STRUCTURE RIM ELEVATION
- NEW RIP-RAP OUTLET, REF. DETAIL 7-C4.5
- 4" PVC ACCESS PORT WITH REMOVABLE CAP, REF. DETAIL 6-C4.5
- 8" PERFORATED PVC UNDERDRAIN IN GRAVEL TRENCH REF. DETAIL 6-C4.5
- NEW SITE LIGHTING FIXTURE

DRAINAGE STRUCTURES

1. 2' DIA. CATCH BASIN
   RIM=212.60
   INV.=209.15(12"NW)
2. 4' DIA. MANHOLE
   RIM=215.75
   INV.=210.00(12"W)
   INV.=208.00(24"S)
   INV.=207.95(24"E)
3. 4' DIA. MANHOLE
   RIM=213.70
   INV.=207.63(24"W)
   INV.=207.63(24"N)
4. 18" CONCRETE FLARED END SECTION
   INV.=211.50
5. 15" CONCRETE FLARED END SECTION
   INV.=211.50
6. 5' DIA. MANHOLE WITH FLAT SLAB TOP
   RIM=214.15
   INV.=211.20(15"SE)
   INV.=207.00(24"S)
   INV.=207.00(30"NW)
7. 5' DIA. MANHOLE WITH FLAT SLAB TOP
   RIM=213.25
   INV.=206.85(30"SE&W)
8. TRENCH DRAIN
   RIM=211.50
   INV.=209.25(6"N)
9. 4' DIA. CATCH BASIN WITH FLAT SLAB TOP
   RIM=211.60
   INV.=209.19(6"S)
   INV.=208.60(12"N)
10. 5' DIA. MANHOLE WITH FLAT SLAB TOP
    RIM=212.20
    INV.=208.10(12"S)
    INV.=206.64(30"E&N)
11. EXISTING DRAINAGE STRUCTURE
    RIM=211.45
    INV.=206.55(EXISTING 30"S&N)
12. TYPE 1 DRAINAGE STRUCTURE
    CURB OPENING=210.75
    INV.=208.09(15"W)
13. EXISTING DRAINAGE STRUCTURE
    RIM=210.97
    INV.=207.97(15"E)
    INV.=207.27(EXISTING 24"S&N)
14. ADJUST EXISTING DRAINAGE STRUCTURE
    NEW RIM=211.60
    EXISTING RIM=210.20
    INV.=206.30(EXISTING 24"S)
    INV.=206.30(EXISTING 30"N)
15. CONCRETE INTERFERENCE BOX
    RIM=211.95
    INV.=207.07(8" SANITARY SEWER)
    INV.=206.28(EXISTING 30"S&N)
16. 18" CONCRETE FLARED END SECTION
    INV.=211.50
17. 15" REINFORCED CONCRETE FLARED END SECTION
    INV.=211.50
18. 4' DIA. MANHOLE WITH FLAT SLAB TOP
    RIM=214.15
    INV.=211.20(15"S)
    INV.=207.70(15"N)
19. TYPE 1 DRAINAGE STRUCTURE
    CURB OPENING=210.20
    INV.=207.30(15"S)
    INV.=207.20(15"W)
20. EXISTING DRAINAGE STRUCTURE
    RIM=210.11
    INV.=206.45(NEW 12"E)
    INV.=205.61(EXISTING 30"S&N)

SANITARY STRUCTURES

- 101 1000 GALLON GREASE TRAP
  RIM=215.45
  INLET=211.65(6"S)
  OUTLET=211.40(6"W)
- 102 4' DIA. MANHOLE
  RIM=214.65
  INV.=210.43(6"E)
  INV.=210.00(8"S)
- 103 4' DIA. MANHOLE
  RIM=214.85
  INV.=208.30(8"E)
  INV.=207.80(8"N)
  INV.=208.10(8"W)
- 104 4' DIA. MANHOLE
  RIM=212.75
  INV.=207.22(8"E)
  INV.=207.12(8"W)
- 105 EXISTING MANHOLE
  RIM=210.07
  INV.=206.17(NEW 8"E)
  INV.=206.07(EXISTING OUTLET)

SYM.	D.O. NO.	ACTION	DATE	DESCRIPTION OF REVISION

DEFENSE COMMISSARY AGENCY
DIRECTORATE OF PERFORMANCE & POLICY
FORT LEE, VIRGINIA
LACKLAND AFB, TEXAS

DESIGNED BY: ---
DRAWN BY: ---
REVIEWED BY: ---
SUBMITTED BY:
ENGINEER:

DESIGN/BUILD NEW COMMISSARY

SITE UTILITY PLAN

MAXWELL A.F.B. - GUNTER ANNEX, ALABAMA

SOL. NO.
DATE: 01 AUG 2011
PROJECT NO. DEOAMP05
DRAWING NUMBER
SHEET NO. OF
SEQUENCE NO. C6.1

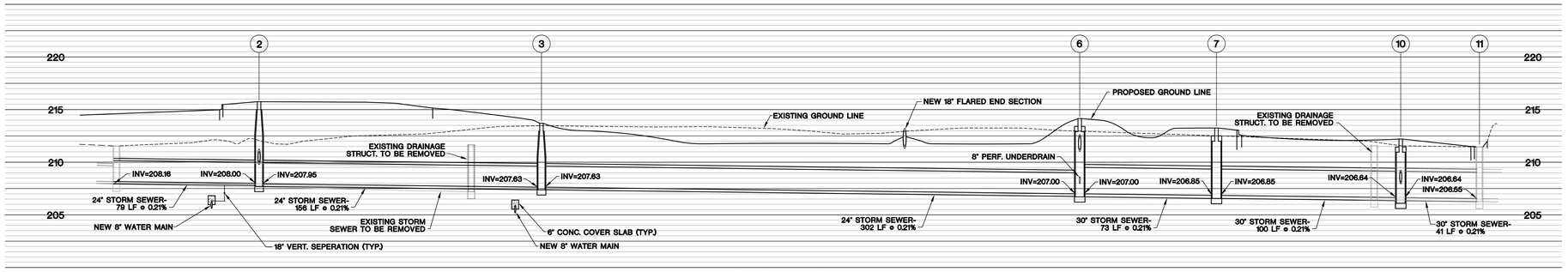

STORM SEWER PROFILE
SCALE: 1"=30' HORIZONTAL
1"=5' VERTICAL

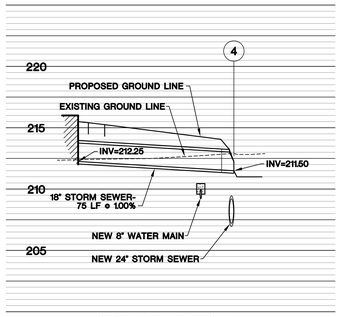

STORM SEWER PROFILE
SCALE: 1"=30' HORIZONTAL
1"=5' VERTICAL

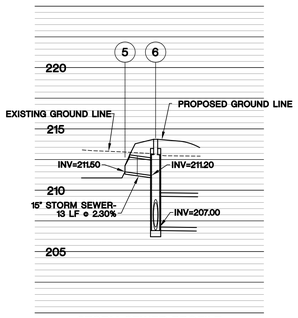

STORM SEWER PROFILE
SCALE: 1"=30' HORIZONTAL
1"=5' VERTICAL

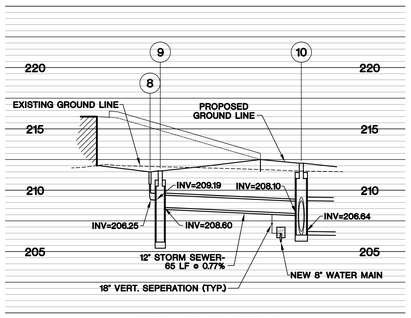

STORM SEWER PROFILE
SCALE: 1"=30' HORIZONTAL
1"=5' VERTICAL

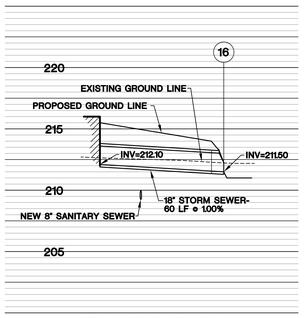

STORM SEWER PROFILE
SCALE: 1"=30' HORIZONTAL
1"=5' VERTICAL

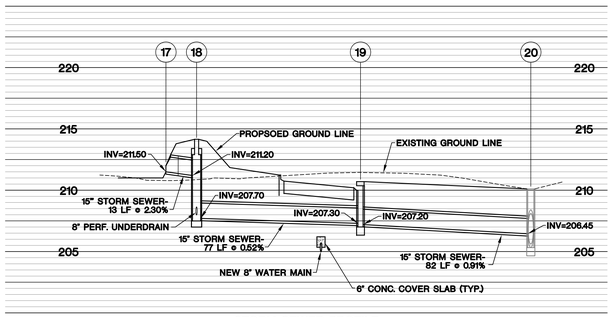

STORM SEWER PROFILE
SCALE: 1"=30' HORIZONTAL
1"=5' VERTICAL

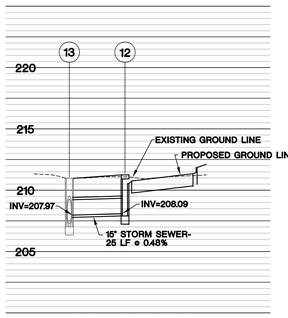

STORM SEWER PROFILE
SCALE: 1"=30' HORIZONTAL
1"=5' VERTICAL

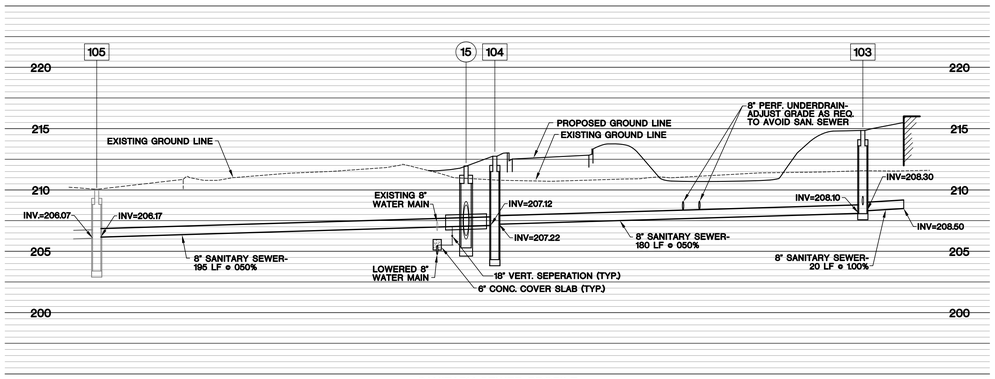

SANITARY SEWER PROFILE
SCALE: 1"=30' HORIZONTAL
1"=5' VERTICAL

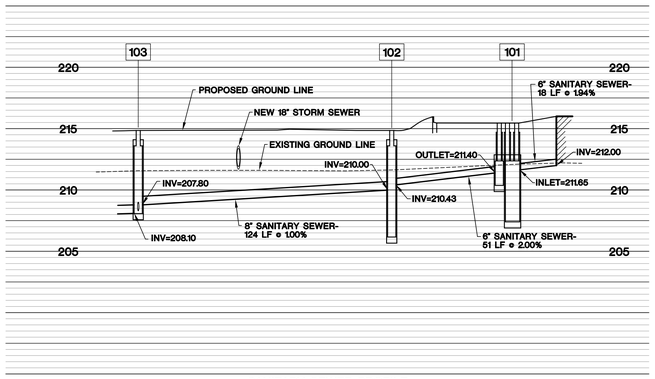

SANITARY SEWER PROFILE
SCALE: 1"=30' HORIZONTAL
1"=5' VERTICAL

SYM.	D.O. NO.	ACTION	DATE	DESCRIPTION OF REVISION

DEFENSE COMMISSARY AGENCY
DIRECTORATE OF PERFORMANCE & POLICY
FORT LEE, VIRGINIA
LACKLAND AFB, TEXAS

DESIGNED BY: ---
DRAWN BY: ---
REVIEWED BY: ---

DESIGN/BUILD NEW COMMISSARY

SITE UTILITY PROFILES

MAXWELL A.F.B. – GUNTER ANNEX, ALABAMA

SUBMITTED BY:
ENGINEER:

SOL. NO.
DATE: 01 AUG 2011
PROJECT NO. DEC0MP05
DRAWING NUMBER
SHEET NO. OF
SEQUENCE NO. C6.2

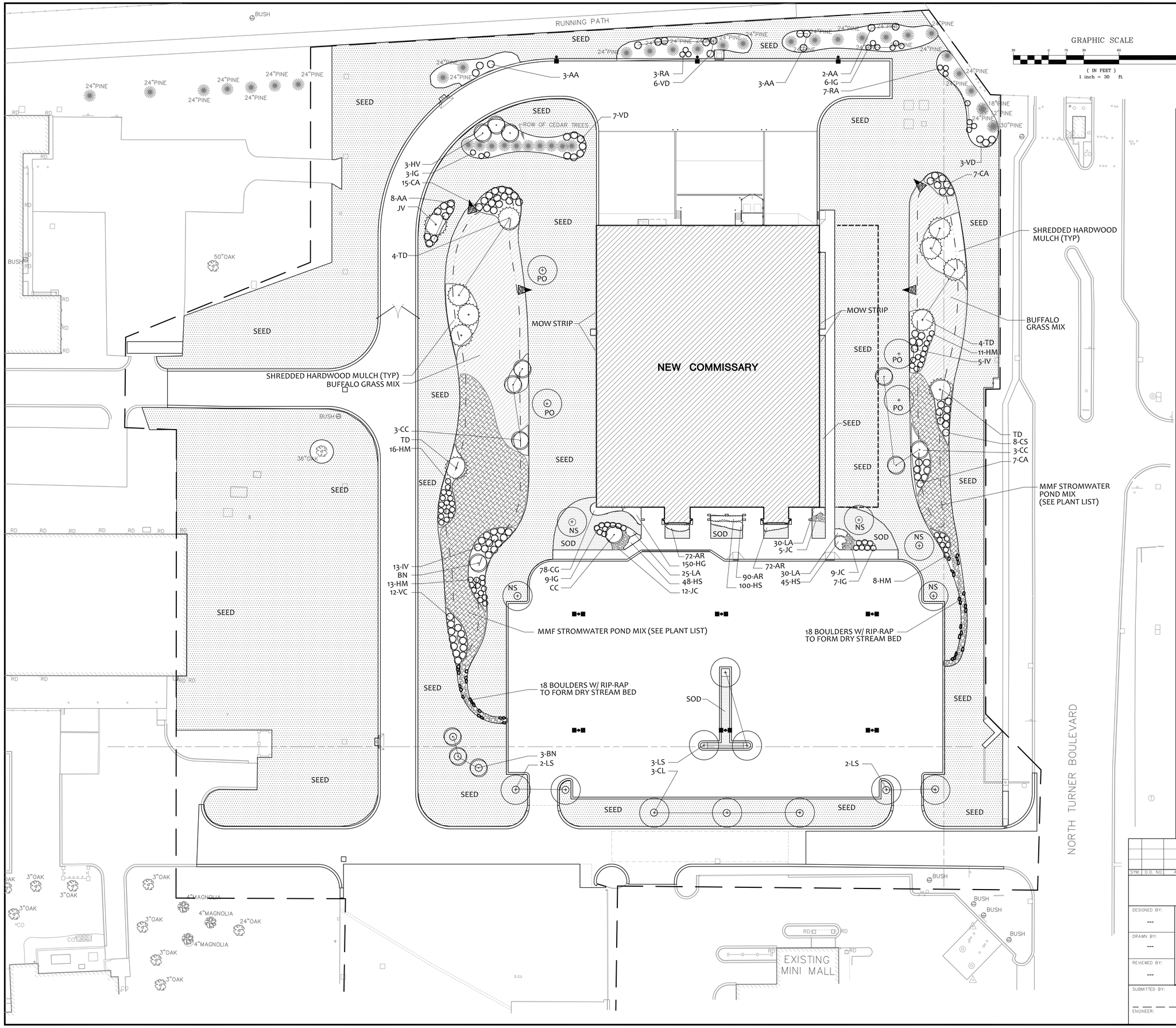

PLANT LEGEND

SYMBOL	COMMON NAME
SHADE TREES	
CL	Sugarberry
LS	Sweetgum
NS	Blackgum
PO	American Sycamore
ORNAMENTAL TREES	
BN	River Birch
CC	Ironwood
HV	Common Whitchhazel
CONIFER TREES	
JV	Eastern Red Cedar
TD	Bald Cypress
SHRUBS	
AA	Red Chokeberry
CA	Silky Dogwood
CS	Coastal sweetpepperbush
HM	Crimsoneyed rosemallow
IG	Inkberry
IV	Virginia sweetspire
JC	Kallay Juniper
RA	Smooth Azalea
VC	Highbush Blueberry
VD	Arrowwood Viburnum
PERENNIALS, ORNAMENTAL GRASSES AND GROUNDCOVERS	
AR	Mahogany Ajuga
CG	Early Sunshine Coreopsis
HG	Georgia Peach Heuchera
HS	Stella D'Oro Daylily
LA	Shasta Daisy

SYMBOL LEGEND

- CONCRETE FLARED END SECTION WITH RIP-RAP
- LAWN SEED AREA
- LAWN SOD AREA
- STORMWATER POND AREA
- BUFFALO GRASS MIXTURE
- 24" PINE — EXISTING PINE TREE WITH TRUNK DIA.
- 36" OAK — EXISTING DECIDUOUS TREE WITH TRUNK DIA.

NOTES

1) SEE L1.2 FOR QUANTITIES AND ADDITIONAL INFORMATION.
2) NO PERMANENT IRRIGATION SYSTEM IS TO BE PROVIDED. THE CONTRACT COST IS TO INCLUDE INSTALLATION, MAINTENANCE AND REMOVAL OF A TEMPORARY SYSTEM DURING THE PERIOD OF PLANT ESTABLISHMENT.

SYM.	D.O. NO.	ACTION	DATE	DESCRIPTION OF REVISION

DEFENSE COMMISSARY AGENCY
DIRECTORATE OF PERFORMANCE & POLICY
FORT LEE, VIRGINIA
LACKLAND AFB, TEXAS

DESIGNED BY: ---
DRAWN BY: ---
REVIEWED BY: ---
SUBMITTED BY:
ENGINEER:

DESIGN/BUILD NEW COMMISSARY

LANDSCAPE PLAN

MAXWELL A.F.B. – GUNTER ANNEX, ALABAMA

SOL. NO.
DATE: 01 AUG 2011
PROJECT NO. DEC04MP05
DRAWING NUMBER
SHEET NO. OF
SEQUENCE NO. L1.1

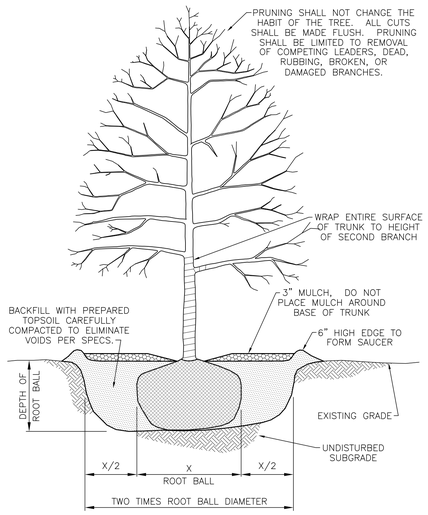

1 TREE PLANTING
NOT TO SCALE
L1.1 | L1.2

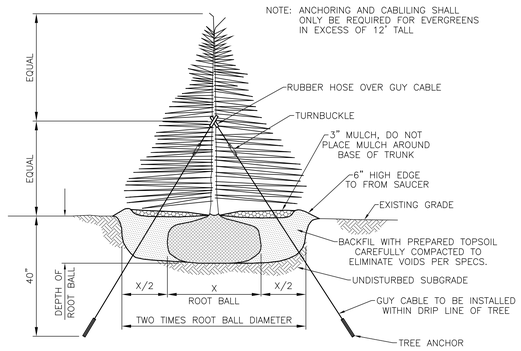

2 CONIFER PLANTING
NOT TO SCALE
L1.1 | L1.2

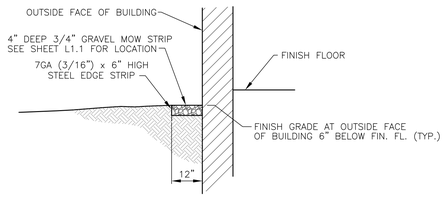

TYPICAL SECTION AT WALL

3 MOW STRIP
NOT TO SCALE
L1.1 | L1.2

PLANT MATERIAL LIST

SYM	QTY	BOTANICAL NAME	COMMON NAME	SIZE	COMMENTS
		SHADE TREES			
CL	3	Celtis laevigata	Sugarberry	2 1/2"	
LS	7	Liquidambar styraciflua	Sweetgum	2 1/2"	
NS	5	Nyssa sylvatica	Blackgum	2 1/2"	Spring Dig
PO	4	Platanus occidentalis	American Sycamore	2 1/2"	Spring Dig
		ORNAMENTAL TREES			
BN	4	Betula nigra	River Birch	6'	Spring Dig
CC	7	Carpinus caroliana	Ironwood	6'	Spring Dig
HV	3	Hamamelis virginiana	Common Whitchhazel	6'	Spring Dig
		CONIFER TREES			
JV	1	Juniperus virginiana	Eastern Red Cedar	6'	
TD	10	Taxodium distichum	Bald Cypress	6'	
		SHRUBS			
AA	16	Aronia arbutifolia	Red Chokeberry	5 Gal.	
CA	29	Cornus amomum	Silky Dogwood	5 Gal.	
CS	8	Cleathra alnifolia	Coastal sweetpepperbush	3 Gal.	
HM	48	Hibiscus moscheutos	Crimsoneyed rosemallow	3 Gal.	
IG	25	Ilex glabra	Inkberry	3 Gal.	
IV	18	Itea virginiana	Virginia sweetspire	3 Gal.	
JC	26	Juniperus chinensis 'Pfitzeriana Kallay'	Kallay Juniper	3 Gal.	
RA	10	Rhododendron arborescans	Smooth Azalea	3 Gal.	
VC	12	Vaccinium corymbosum	Highbush Blueberry	3 Gal.	
VD	16	Viburnum dentatum	Arrowwood Viburnum	5 Gal.	
		PERENNIALS, ORNAMENTAL GRASSES AND GROUNDCOVERS			
AR	234	Ajuga reptans 'Mahogany'	Mahogany Ajuga	4" pots	12" O.C.
CG	78	Coreopsis grandiflora 'Early Sunshine'	Early Sunshine Coreopsis	1 Gal.	18" O.C.
HG	150	Heuchera 'Georgia Peach	Georgia Peach Heuchera	4" pots	12" O.C.
HS	193	Hemerocallis x 'Stella D'Oro'	Stella D'Oro Daylily	1 Gal.	18" O.C.
LA	55	Leucanthemum x superbum 'Alaska'	Shasta Daisy	1 Gal.	18" O.C.

TURF AND MISCELLANEOUS MATERIALS

SOD: Approx. 610 S.y. as indicated on plan.

LAWN SEED: Approx. 4.50 Acres Low Maintenance Lawn Mixture on all disturbed areas as indicated. Apply 575 Erosion Control Blanket on slopes that exceed 3:1

BUFFALO GRASS SEED: Approx. 0.30 Acres as indicated on plan.

BIOSWALE SEED: 0.25 Acres, to consist of the following mix or approved equal:

MMF Stormwater Pond Mix - 20-25 lbs./AC.
- 28 % Agrostis stolonifera - Creeping Bentgrass
- 23 % Carex vulpinoidea - Fox Sedge
- 28 % Elymus virginicus - Virginia Wild Rye
- 4 % Helenium autumnale - Sneezeweed
- 5 % Iris versicolor - Blue Flag
- 4 % Desmodium canadense - Showy Tick Trefoil
- 4 % Rudbeckia hirta - Black-eyed Susan
- 4 % Verbena hastata - Blue vervain

SHREDDED HARDWOOD MULCH: Approx. 185 C.Y , all planting beds and tree rings to a depth of 3".

BOULDERS: 36 total boulders to be placed as indicated on plan in "Dry Stream Bed". Boulders shall be between 24" - 36" and shall be selected by contractor from a local source.

STEEL EDGING FOR MOW STRIP: Approx. 460 L.F.

NOTE: Quantities indicated in the table above are approximate. See Sheet L1.1 for exact quantities.

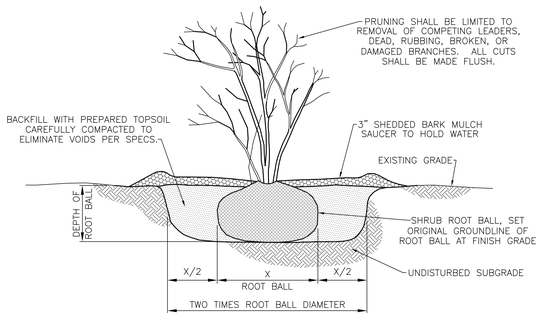

4 SHRUB PLANTING
NOT TO SCALE
L1.1 | L1.2

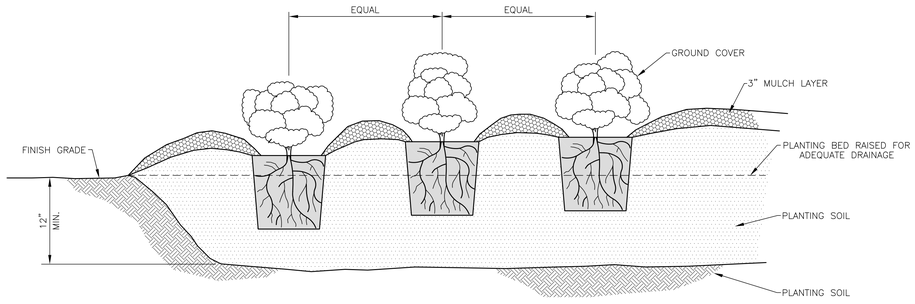

5 GROUND COVER / PERENNIAL AND VINE PLANTING
NOT TO SCALE
L1.1 | L1.2

SYM.	D.O. NO.	ACTION	DATE	DESCRIPTION OF REVISION

DEFENSE COMMISSARY AGENCY
DIRECTORATE OF PERFORMANCE & POLICY
FORT LEE, VIRGINIA
LACKLAND AFB, TEXAS

DESIGNED BY: ---
DRAWN BY: ---
REVIEWED BY: ---

NEW COMMISSARY FACILITY

LANDSCAPE DETAILS

MAXWELL A.F.B. – GUNTER ANNEX, ALABAMA

SUBMITTED BY:
ENGINEER:

SOL. NO.
DATE: 01 AUG 2011
PROJECT NO. DEOAMP05
DRAWING NUMBER
SHEET NO. OF
SEQUENCE NO. L1.2