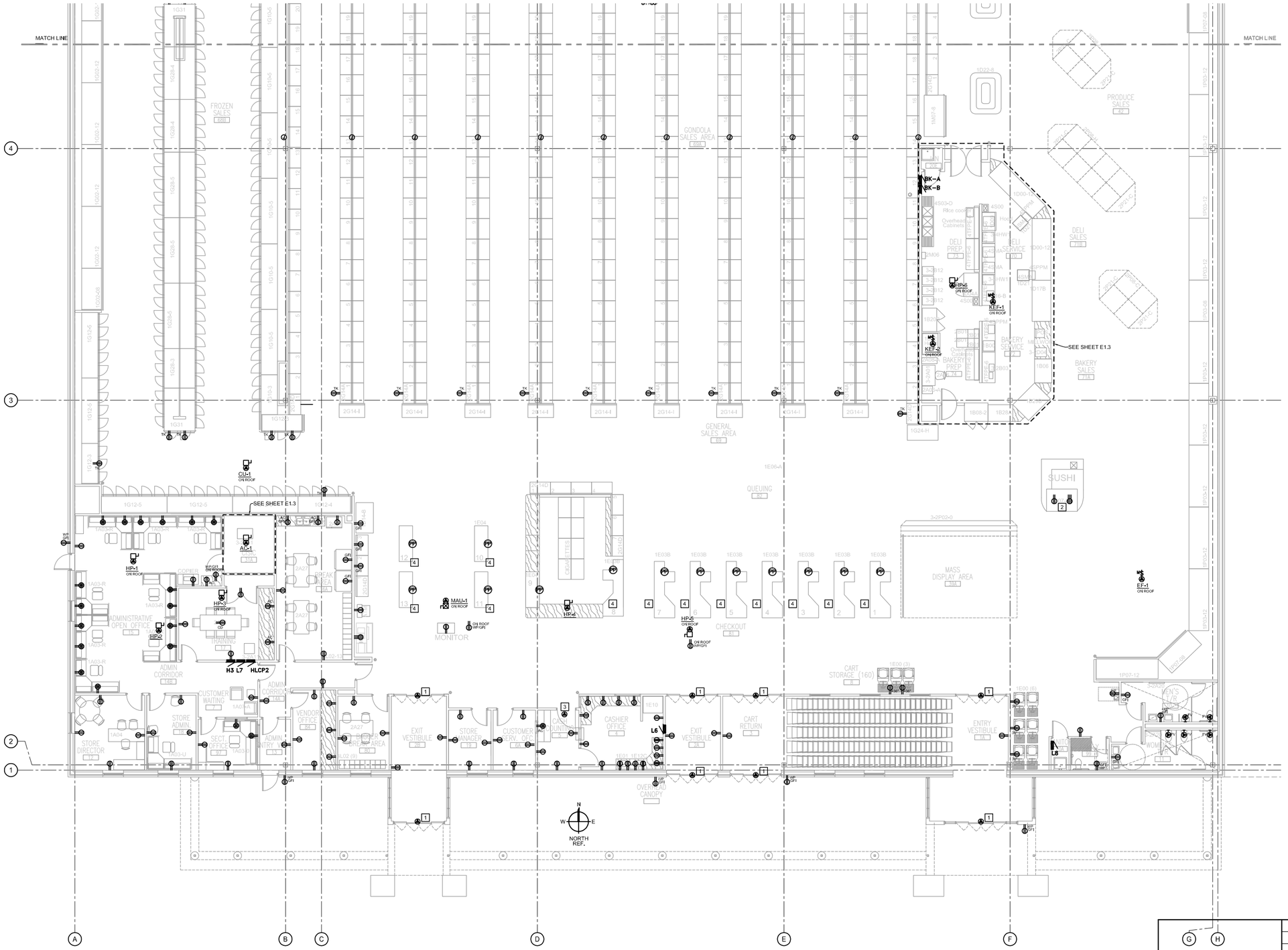

1 E1.1 ELECTRICAL POWER PLAN AREA 'A'

1/8"=1'-0"

0 4' 8' 16'

SCALE: 1/8" = 1'-0"

NORTH REF.

ROOM LEGEND	
ROOM NO.	ROOM NAME
1A	ENTRY VESTIBULE
2A	EXIT VESTIBULE
2B	EXIT VESTIBULE
3	CART RETURN
4	CASHIER OFFICE
5	CASH COUNTING
6A	CUSTOMER SERVICE OFFICE
7	CUSTOMER WAITING
8	CART STORAGE
10	MEN'S TOILET ROOM
11	WOMEN'S TOILET ROOM
12	STORE DIRECTOR
13	ADMIN. ENTRY VESTIBULE
14A	ADMIN. CORRIDOR
14B	ADMIN. CORRIDOR
15	ADMINISTRATION OPEN OFFICE
16A	BREAK AREA
16B	BREAK AREA
17	TRAINING
18	STORE ADMIN.
19	STORE MANAGER
20A	JANITOR
20B	JANITOR
20C	JANITOR
20D	JANITOR
20E	JANITOR
21A	VESTIBULE
21B	VESTIBULE
23	DAMAGED MERCH
23A	DAMAGED SALES
25	WOMEN'S LOCKER
26B	WOMEN'S TOILET ROOM
27B	MEN'S TOILET ROOM
28	MEN'S LOCKER
30	CONT./STOCK STORAGE
31A	CISIC
31B	COMM SUB HUB
31C	FIRE RISER
31D	ELEC. DIST.
31E	MECHANICAL
32	SENSITIVE STORAGE
34	MEDICAL FOOD INSPECTION
35	RECEIVING MANAGER
36A	RECEIVING/STAGING
36B	CLASS IV MATERIAL STORAGE (INCL IN 38 AREA)
38	MHE CHARGING AREA (INCL IN 38 AREA)
39A	MASS DISPLAY AREA
42	PRODUCE SALES (INCLUDED IN 69)
43A	CHILL STORAGE GAS PRODUCE
43B	CHILL STORAGE NON GAS PRODUCE
44A	PROCESSING
44B	AMBIENT STORAGE
45	PRODUCE MANAGER
46	GROCERY MANAGER
55	MEAT PROCESSING
56	MEAT WRAPPING
57	MEAT MANAGER
58	MEAT SALES AREA (INCLUDED IN 69)
59	PRE-PACK, POULTRY & BULK MEAT STORAGE
66	DAIRY SALES AREA (INCLUDED IN 69)
67	DAIRY COOLER
68	FROZEN FOOD STORAGE
68B	FROZEN SALES (INCLUDED IN 69)
69	GENERAL SALES AREA
69A	GONDOLA SALES AREA (INCLUDED IN 69)
70	DELI SERVICE
71A	BAKERY SALES
71B	DELI SALES
72	BAKERY SERVICE
73	DELI PREP.
74	BAKERY PREP
75	DELI CHILL STORAGE
76	BAKERY FREEZER
80	BAGGER BREAK AREA
81	CHECKOUT
82	QUEUING
84	VENDOR OFFICE
97	SECT. OFFICE
98C	ROOF STAIR
99	FAMILY

NOT FOR CONSTRUCTION - PRELIMINARY DESIGN

ITEMS OF WORK		INDICATE CLASS REQUIRED		
		MTS	E	C
1	PROVIDE CONNECTION TO MOTORIZED DOOR.			•
2	PROVIDE 30A, 1ϕ TWISTLOCK WITH 30 AMP CIRCUIT AND L5-20R RECEPTACLE WITH DEDICATED 20 AMP CIRCUIT			•
3	PROVIDE 120 VAC CONNECTION TO DOOR CONTROL POWER SUPPLY.			•
4	SEE DETAILS 1, 2, 3 AND 4 ON SHEET E4.3.		•	

GENERAL NOTES

1. COMPLY WITH NEC 2011.
2. SHARED NEUTRALS ARE NOT ALLOWED FOR SINGLE PHASE 120VAC CIRCUITS.

TO THE BEST OF OUR KNOWLEDGE, INFORMATION AND BELIEF, BASED ON AND LIMITED TO OUR NORMAL FUNCTIONS PERFORMED UNDER OUR CONTRACT WITH THE GOVERNMENT, IT IS OUR PROFESSIONAL OPINION THAT THIS PROJECT IS DESIGNED IN ACCORDANCE WITH APPLICABLE DOD REGULATIONS.

SYM.	D.O. NO.	ACTION	DATE	DESCRIPTION OF REVISION

CTA ARCHITECTS & ENGINEERS
13 NORTH 23RD STREET
BILLINGS MONTANA
1.406.248.7455

DEFENSE COMMISSARY AGENCY
DIRECTORATE OF PERFORMANCE AND POLICY
FACILITIES PROGRAMMING AND PLANNING DIVISION
FORT LEE, VIRGINIA
FACILITIES CONSTRUCTION AND SUSTAINMENT DIVISION
LACKLAND AFB, TEXAS

DESIGNED BY: HAIDLE / BRUNSVOLD
DRAWN BY: BRUNSVOLD
REVIEWED BY: HAIDLE

DESIGN-BUILD NEW COMMISSARY
RFP DOCUMENTS

POWER PLAN AREA 'A'

FORT POLK
LA

SUBMITTED BY: CTA ARCHITECTS ENGINEERS
ENGINEER: CTA ARCHITECTS ENGINEERS

SOL. NO.
DATE: JANUARY 3, 2012
PROJECT NO. DE10MP01
DRAWING NUMBER E1.1
SHEET NO. 1 OF 8
SEQUENCE NO. 41

FILE NAME: DE10MP01-E1
DATE: 01/03/2012

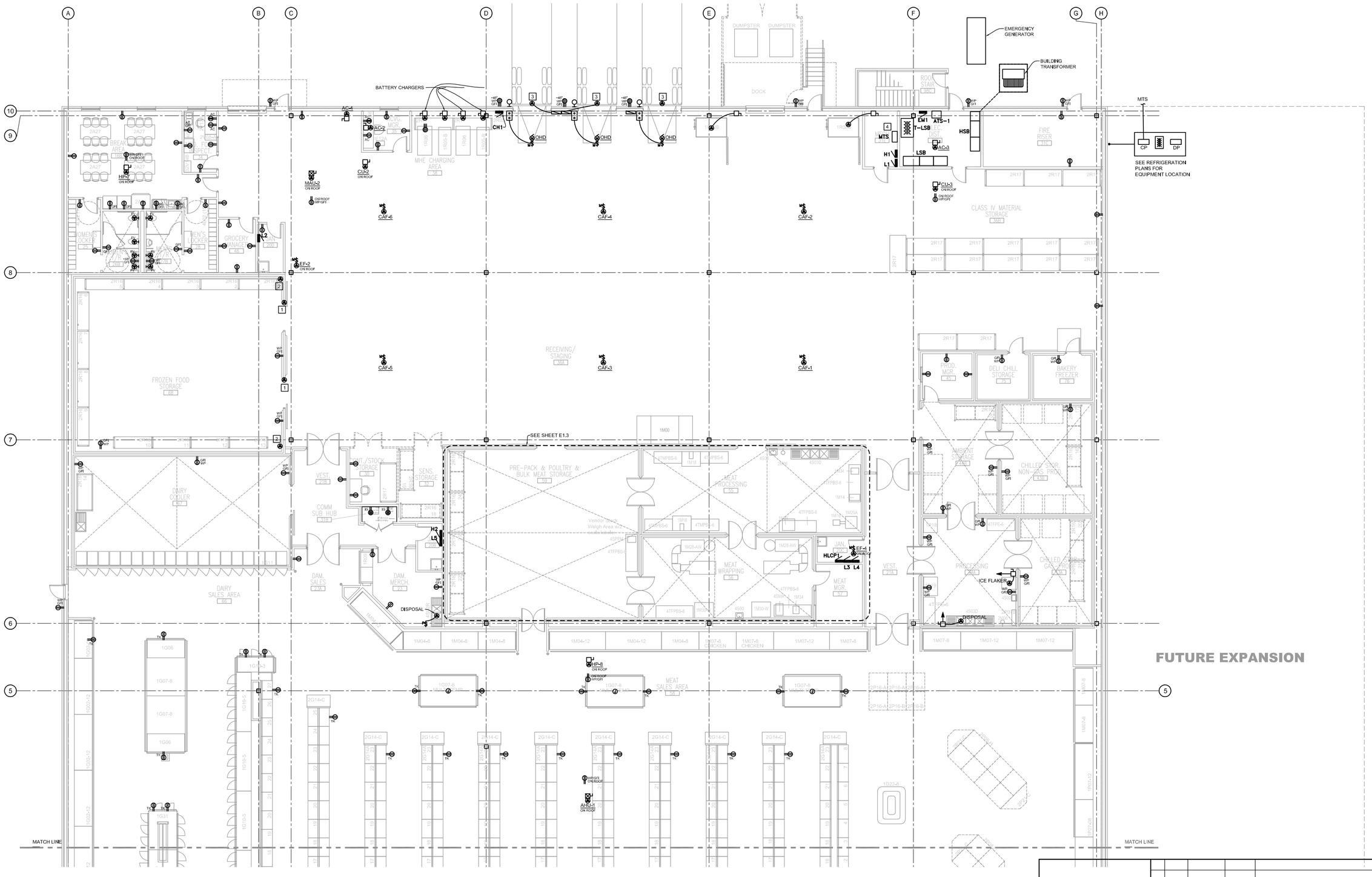

1 E1.2 ELECTRICAL POWER PLAN AREA 'B'

0 4' 8' 16'

1/8"=1'-0"

SCALE: 1/8" = 1'-0"

NORTH REF.

NOT FOR CONSTRUCTION - PRELIMINARY DESIGN

ITEMS OF WORK		INSTEAD OF EQUIPMENT		
		NOTE	E	C
1	PROVIDE CONNECTION TO DOOR HEATER.			•
2	PROVIDE CONNECTION TO FREEZER CURB ICE MELT SYSTEM. SEE DETAIL 5/E4.2.			•
3	SEE DOCK LEVELER DETAIL 2/E4.2.			•
4	MANUAL TRANSFER SWITCH FOR THE REFRIGERATION SYSTEM.		•	

GENERAL NOTES

1. COMPLY WITH NEC 2011.
2. SHARED NEUTRALS ARE NOT ALLOWED FOR SINGLE PHASE 120VAC CIRCUITS.

TO THE BEST OF OUR KNOWLEDGE, INFORMATION AND BELIEF, BASED ON AND LIMITED TO OUR NORMAL FUNCTIONS PERFORMED UNDER OUR CONTRACT WITH THE GOVERNMENT, IT IS OUR PROFESSIONAL OPINION THAT THIS PROJECT IS DESIGNED IN ACCORDANCE WITH APPLICABLE DOD REGULATIONS.

SYM.	D.O. NO.	ACTION	DATE	DESCRIPTION OF REVISION

CTA ARCHITECTS & ENGINEERS
13 NORTH 23RD STREET
BILLINGS MONTANA
1.406.248.7455

DEFENSE COMMISSARY AGENCY
DIRECTORATE OF PERFORMANCE AND POLICY
FACILITIES PROGRAMMING AND PLANNING DIVISION
FORT LEE, VIRGINIA
FACILITIES CONSTRUCTION AND SUSTAINMENT DIVISION
LACKLAND AFB, TEXAS

DESIGNED BY: HAIDLE / BRUNSVOLD
DRAWN BY: BRUNSVOLD
REVIEWED BY: HAIDLE

DESIGN-BUILD NEW COMMISSARY
RFP DOCUMENTS

POWER PLAN AREA 'B'

FORT POLK
LA

SUBMITTED BY: CTA ARCHITECTS ENGINEERS
ENGINEER: CTA ARCHITECTS ENGINEERS

SOL. NO.
DATE: JANUARY 3, 2012
PROJECT NO. DE10MP01
DRAWING NUMBER E1.2
SHEET NO. 2 OF 8
SEQUENCE NO. 42

CTAR DECA2_FTPOLK
FILE NAME POLKE1.2
DIRECTORY DECA2_FTPOLK

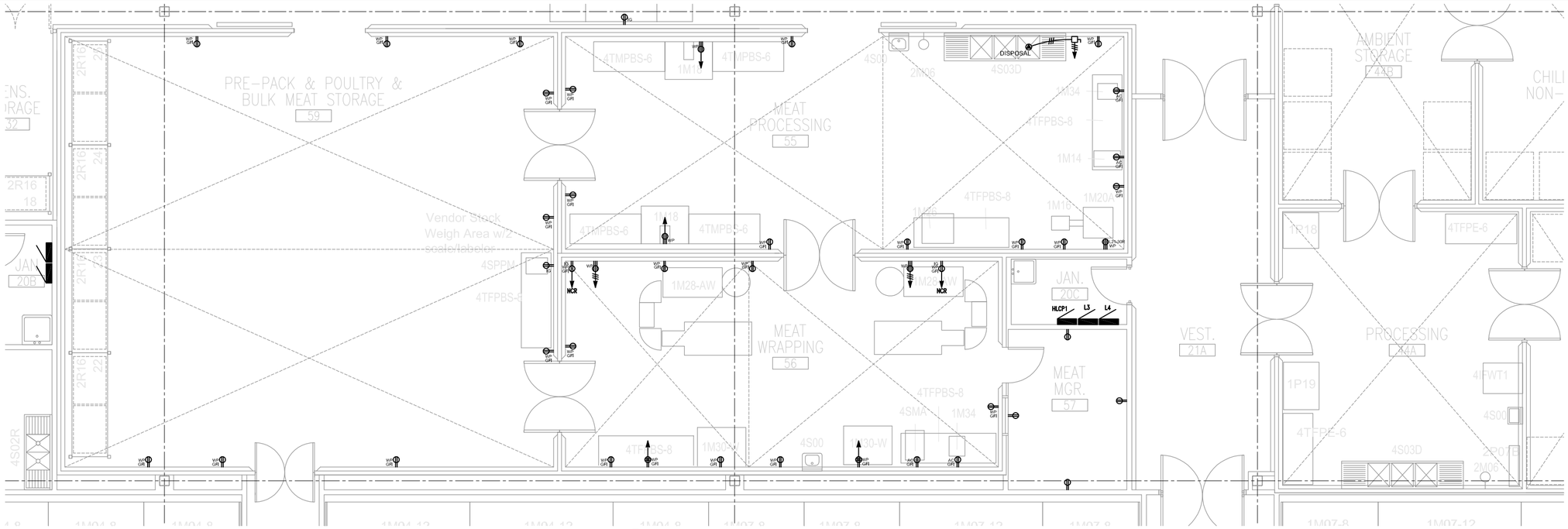

1 E3.3 ENLARGED ELECTRICAL MEAT PREP PLAN

0 2' 4' 8' 1/4"=1'-0"

SCALE: 1/4" = 1'-0"

NORTH REF.

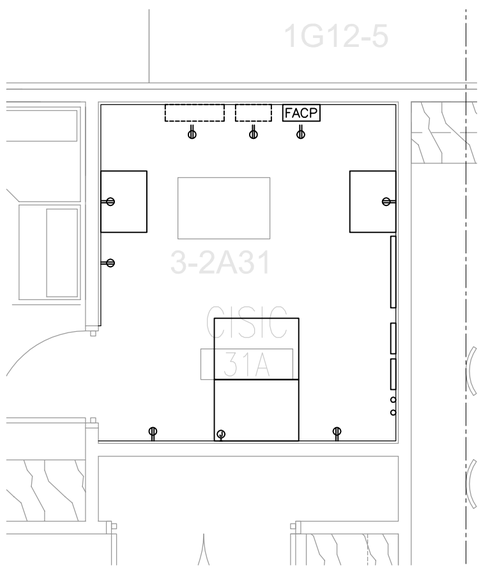

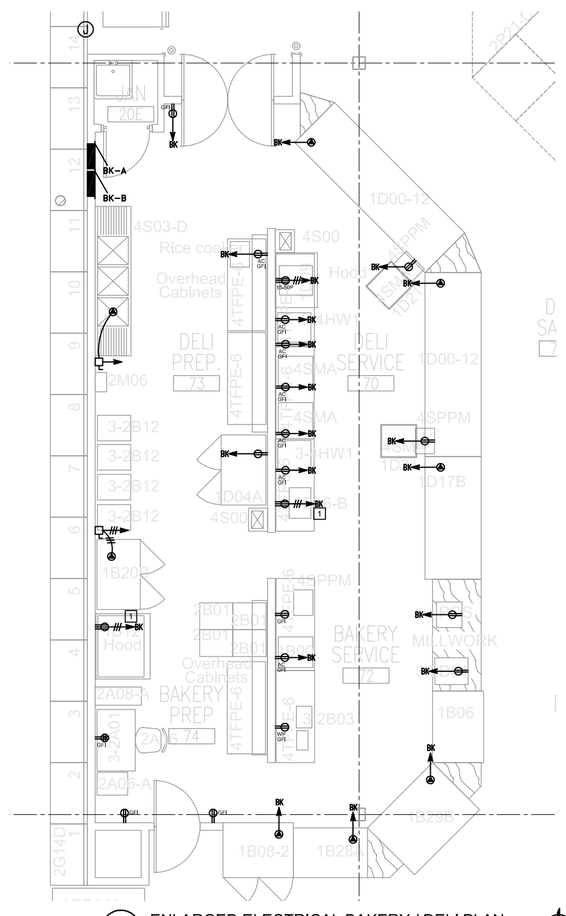

1 E3.3 ENLARGED ELECTRICAL BAKERY / DELI PLAN

0 2' 4' 8' 1/4"=1'-0"

SCALE: 1/4" = 1'-0"

NORTH REF.

GENERAL NOTES

1. COMPLY WITH NEC 2011.
2. SHARED NEUTRALS ARE NOT ALLOWED FOR SINGLE PHASE 120VAC CIRCUITS.

ITEMS OF WORK

		BUDGET CATEGORIES		
		RPTE	E	C
1	PROVIDE SHUNT TRIP BREAKER IN PANEL BK. CONNECT THE HOOD EXTINGUISHING SYSTEM SUCH THAT ACTIVATION WILL SHUNT TRIP THE EQUIPMENT UNDER THE HOOD	•	•	•

CTA# DECA2_FTPOLK
FILE NAME: POLKE1.3
DIRECTORY: DECA2_FTPOLK

NOT FOR CONSTRUCTION - PRELIMINARY DESIGN

TO THE BEST OF OUR KNOWLEDGE, INFORMATION AND BELIEF, BASED ON AND LIMITED TO OUR NORMAL FUNCTIONS PERFORMED UNDER OUR CONTRACT WITH THE GOVERNMENT, IT IS OUR PROFESSIONAL OPINION THAT THIS PROJECT IS DESIGNED IN ACCORDANCE WITH APPLICABLE DOD REGULATIONS.

SYM.	D.O. NO.	ACTION	DATE	DESCRIPTION OF REVISION

CTA ARCHITECTS & ENGINEERS
13 NORTH 23RD STREET
BILLINGS MONTANA
1.406.248.7455

DEFENSE COMMISSARY AGENCY
DIRECTORATE OF PERFORMANCE AND POLICY
FACILITIES PROGRAMMING AND PLANNING DIVISION
FORT LEE, VIRGINIA
FACILITIES CONSTRUCTION AND SUSTAINMENT DIVISION
LACKLAND AFB, TEXAS

DESIGNED BY: HAIDLE / BRUNSVOLD
DRAWN BY: BRUNSVOLD
REVIEWED BY: HAIDLE

DESIGN-BUILD NEW COMMISSARY
RFP DOCUMENTS
ENLARGED ELECTRICAL PLANS
MEAT PREP AND BAKERY / DELI
FORT POLK
LA

SUBMITTED BY: CTA ARCHITECTS ENGINEERS
ENGINEER: CTA ARCHITECTS ENGINEERS

SOL. NO.
DATE: JANUARY 3, 2012
PROJECT NO. DE10MP01
DRAWING NUMBER E1.3
SHEET NO. 3 OF 8
SEQUENCE NO. 43

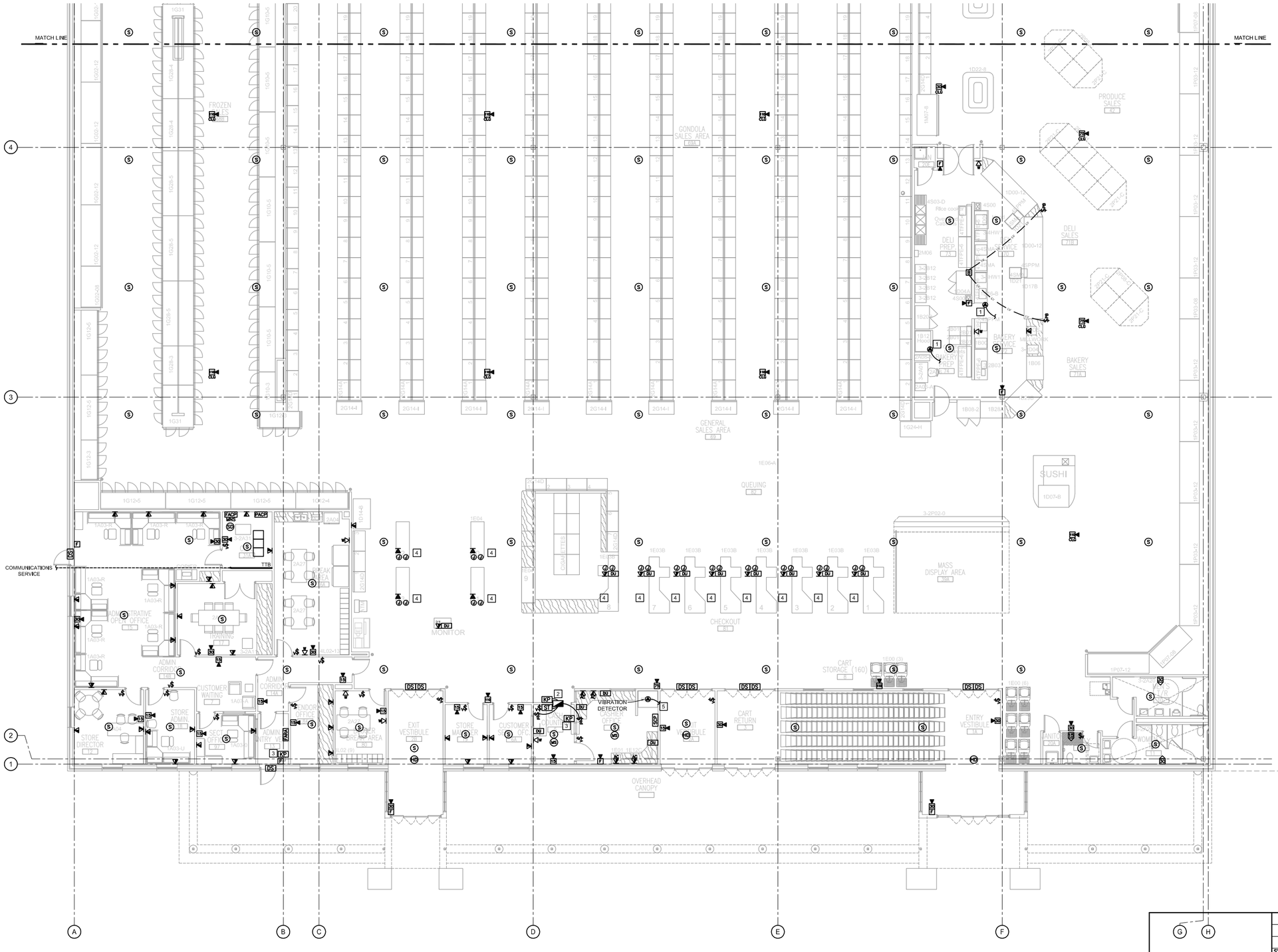

1 E3.1 ELECTRICAL SYSTEMS PLAN AREA 'A'

1/8"=1'-0"

0 4' 8' 16'

SCALE: 1/8" = 1'-0"

ITEMS OF WORK		BADGE READER		
		MTS	T	R
1	PROVIDE CONNECTION TO FACP FOR MONITORING.			•
2	PROVIDE SINGLE DOOR ELECTRICALLY CONTROLLED ACCESS WITH DOOR STRIKE, KEYPAD AND PUSH BUTTON RELEASE.			•
3	SECURITY INTRUSION SYSTEM KEYPAD.		•	
4	SEE DETAILS 1,2,3, AND 4 ON SHEET E4.2.			•
5	CIRCUIT BACK TO SECURITY PANEL		•	

DATE: DECAP_FTPOLK
FILENAME: POLKE3.1
DIRECTORY: C:\DECAP\DECAP_FTPOLK

TO THE BEST OF OUR KNOWLEDGE, INFORMATION AND BELIEF, BASED ON AND LIMITED TO OUR NORMAL FUNCTIONS PERFORMED UNDER OUR CONTRACT WITH THE GOVERNMENT, IT IS OUR PROFESSIONAL OPINION THAT THIS PROJECT IS DESIGNED IN ACCORDANCE WITH APPLICABLE DOD REGULATIONS.

SYM.	D.O. NO.	ACTION	DATE	DESCRIPTION OF REVISION

CTA ARCHITECTS & ENGINEERS
13 NORTH 23RD STREET
BILLINGS MONTANA
1.406.248.7455

DEFENSE COMMISSARY AGENCY
DIRECTORATE OF PERFORMANCE AND POLICY
FACILITIES PROGRAMMING AND PLANNING DIVISION
FORT LEE, VIRGINIA
FACILITIES CONSTRUCTION AND SUSTAINMENT DIVISION
LACKLAND AFB, TEXAS

DESIGNED BY: HAIDLE / BRUNSVOLD
DRAWN BY: BRUNSVOLD
REVIEWED BY: HAIDLE

DESIGN-BUILD NEW COMMISSARY
RFP DOCUMENTS

SYSTEMS PLAN AREA 'A'

FORT POLK
LA

SUBMITTED BY: CTA ARCHITECTS ENGINEERS
ENGINEER: CTA ARCHITECTS ENGINEERS

SOL. NO.
DATE: JANUARY 3, 2012
PROJECT NO. DE10MP01
DRAWING NUMBER E3.1
SHEET NO. 4 OF 8
SEQUENCE NO. 44

NOT FOR CONSTRUCTION - PRELIMINARY DESIGN

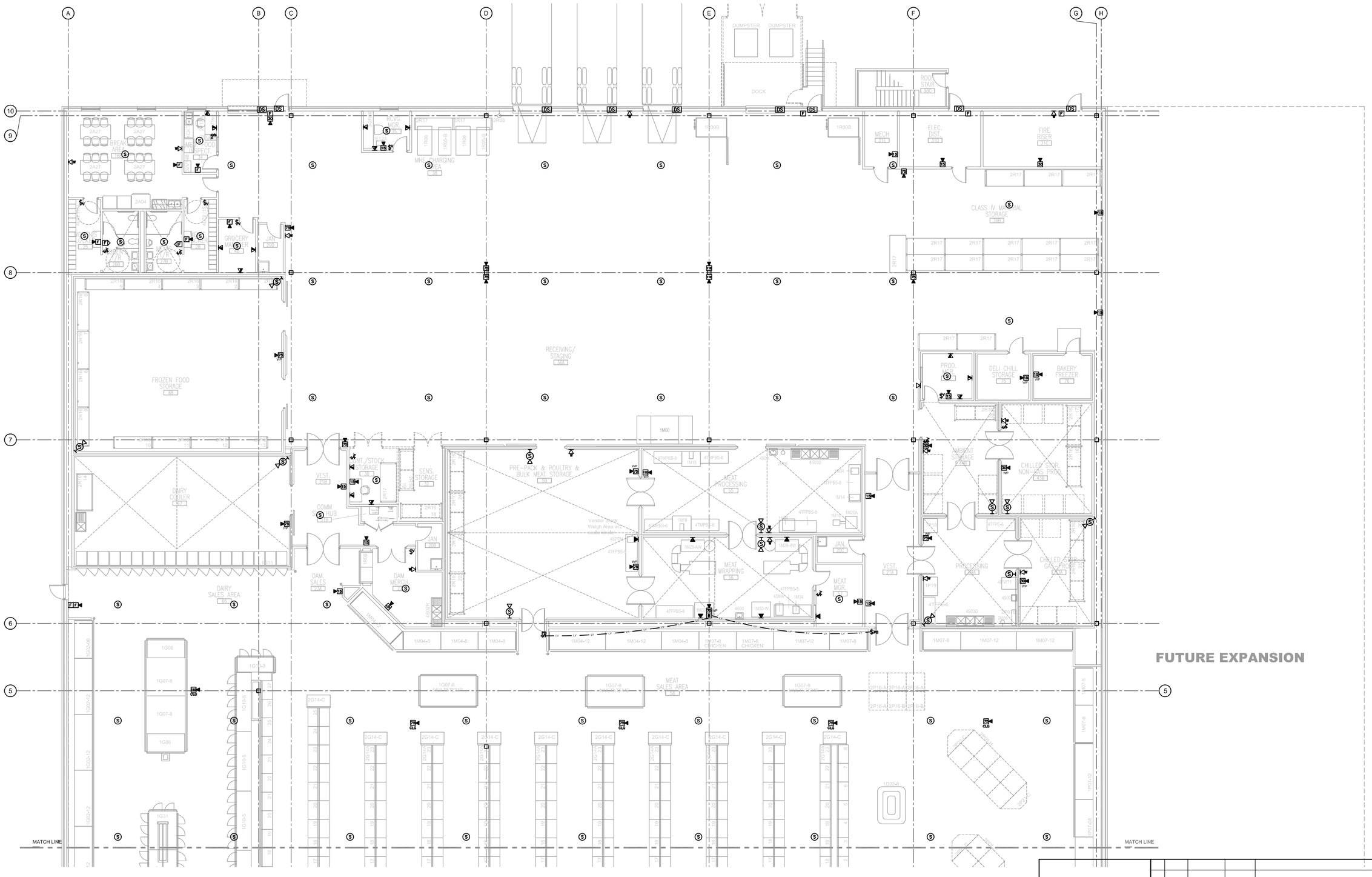

1 E3.2 ELECTRICAL SYSTEMS PLAN AREA 'B'

0 4' 8' 16'

1/8"=1'-0"

SCALE: 1/8" = 1'-0"

NORTH REF.

NOT FOR CONSTRUCTION - PRELIMINARY DESIGN

TO THE BEST OF OUR KNOWLEDGE, INFORMATION AND BELIEF, BASED ON AND LIMITED TO OUR NORMAL FUNCTIONS PERFORMED UNDER OUR CONTRACT WITH THE GOVERNMENT, IT IS OUR PROFESSIONAL OPINION THAT THIS PROJECT IS DESIGNED IN ACCORDANCE WITH APPLICABLE DOD REGULATIONS.

SYM.	D.O. NO.	ACTION	DATE	DESCRIPTION OF REVISION

CTA ARCHITECTS & ENGINEERS
13 NORTH 23RD STREET
BILLINGS MONTANA
1.406.248.7455

DEFENSE COMMISSARY AGENCY
DIRECTORATE OF PERFORMANCE AND POLICY
FACILITIES PROGRAMMING AND PLANNING DIVISION
FORT LEE, VIRGINIA
FACILITIES CONSTRUCTION AND SUSTAINMENT DIVISION
LACKLAND AFB, TEXAS

DESIGNED BY: HAIDLE / BRUNSVOLD

DRAWN BY: BRUNSVOLD

REVIEWED BY: HAIDLE

DESIGN-BUILD NEW COMMISSARY
RFP DOCUMENTS

SYSTEMS PLAN AREA 'B'

FORT POLK
LA

SUBMITTED BY: CTA ARCHITECTS ENGINEERS

ENGINEER: CTA ARCHITECTS ENGINEERS

SOL. NO.

DATE: JANUARY 3, 2012

PROJECT NO. DE10MP01

DRAWING NUMBER E3.2

SHEET NO. 5 OF 8

SEQUENCE NO. 45

CTA# DECA2_FTPOLK
FILE NAME POLK E3.2
DIRECTORY DECA\DECA2FTPOLK

LEGEND

SYMBOL	DEVICES & POWER
$	SWITCH - SPST P PILOT LIGHT PB PUSHBUTTON
	RECEPTACLE - DUPLEX GFI GROUND FAULT INTERRUPT WP WEATHERPROOF IG ISOLATED GROUND TK TOE KICK CD CORD DROP
	RECEPTACLE - DOUBLE DUPLEX SAME INDICATORS AS SHOWN FOR DUPLEX
	RECEPTACLE - 208V * NEMA CONFIGURATION AS NOTED
PP	TELE - POWER POLE GOVERNMENT FURNISHED GOVERNMENT INSTALLED (GFGI)
J, J	J-BOX, J-BOX WALL MOUNTED, 4"x4"x2 1/8" DEEP UNLESS NOTED OTHERWISE
	MANUAL MOTOR DISCONNECT/STARTER SWITCH
A, A	SPECIAL PURPOSE CONNECTION, WORK AS NOTED FV FLUSH VALVE
	DOOR OPERATOR SWITCH
	ELECTRIC MOTOR CONNECTION
	COMBINATION STARTER
	DISCONNECT SWITCH
	CONTROL PANEL
	PANELBOARD, SURFACE MOUNTED
	PANELBOARD, FLUSH MOUNTED
	ELECTRIC METER, BUILDING MOUNTED
	TRANSFORMER
	TRANSFORMER - EXTERIOR PAD MOUNT

SYMBOL	COMMUNICATIONS
B	NOTIFICATION BUZZER
S	SPEAKER
S	HORN SPEAKER
PACP	PUBLIC ADDRESS CONTROL PANEL
21	VOICE/DATA OUTLET - SUBSCRIPT INDICATES NUMBER OF CABLE/JACKS - FIRST NUMBER DATA / SECOND NUMBER VOICE - NO SUBSCRIPT INDICATES 2 CABLES/JACKS
21	VOICE/DATA OUTLET MOUNTED IN FLOORBOX- SUBSCRIPT INDICATES NUMBER OF CABLE/JACKS - FIRST NUMBER DATA / SECOND NUMBER VOICE - NO SUBSCRIPT INDICATES 2 CABLES/JACKS
W	VOICE OUTLET WALL MOUNTED
	DATA RACK

SYMBOL	SECURITY
KP	KEYPAD
DU	DURESS SWITCH
MS	MOTION SENSOR
DS	DOOR CONTACT SWITCH
SCP	SECURITY CONTROL PANEL

SYMBOL	FIRE ALARM / MASS NOTIFICATION
	FA STROBE AND MASS NOTIFICATION STROBE (NUMBER SYMBOLIZES CANDELA RATING)
	SPEAKER, FA STROBE AND MASS NOTIFICATION STROBE (NUMBER SYMBOLIZES CANDELA RATING) CLG CEILING MOUNTED
F	MANUAL PULL STATION
SD	SMOKE DETECTOR
HD	HEAT DETECTOR
FARA	FIRE ALARM & MASS NOTIFICATION REMOTE ANNUNCIATOR
FACP	COMBINATION FIRE ALARM & MASS NOTIFICATION PANEL

SYMBOL	ABBREVIATIONS AND MISCELLANEOUS
AC	ABOVE COUNTER, 4" ABOVE BACK SPLASH
ATS	AUTOMATIC TRANSFER SWITCH
AFG	ABOVE FINISHED GRADE
AFF	ABOVE FINISHED FLOOR
BLG	BELOW GRADE
BOD	BOTTOM OF DEVICE
C	CONDUIT
CLG	CEILING
COD	CENTER OF DEVICE
CU	COPPER
EC	ELECTRICAL CONTRACTOR
EF	EXHAUST FAN
FA	FIRE ALARM
GC	GENERAL CONTRACTOR
GND	GROUND
MC	MECHANICAL CONTRACTOR
MN	MASS NOTIFICATION
MNP	MASS NOTIFICATION PANEL
RMCS	REFRIGERATION MANAGEMENT CONTROL SYSTEM
SF	SURFACE
TC	TEMPERATURE CONTROL CONTRACTOR
TTB	TELEPHONE TERMINAL BOARD
UG	UNDERGROUND
W/	WITH
WM	WIRE MOLD
WP	WEATHER PROOF
XFMR	TRANSFORMER
a,b,c etc.	SWITCH DESIGNATION
BN1L-2,4,6	CIRCUIT DESIGNATION, PANELBOARD BN1L, CIRCUITS 2, 4, 6
1/E5.2	INDICATES DETAIL 1 ON SHEET E5.2
1	SHEET WORK NOTE
	HOME RUN TO PANELS, NUMBER OF ARROWS INDICATES NUMBER OF CIRCUITS
	CONDUIT CONCEALED IN CEILING OR WALL
	CONDUIT CONCEALED UNDER FLOOR
LV	LOW VOLTAGE CIRCUIT
	CIRCUIT, NUMBER OF HASH MARKS INDICATES NUMBER OF CONDUCTORS IN CABLE/RACEWAY. GROUND WIRE NOT SHOWN BUT SHALL BE INCLUDED. NO HASH MARKS INDICATES 2 CONDUCTORS PLUS GROUND.

INTERIOR BOX MOUNTING HEIGHTS

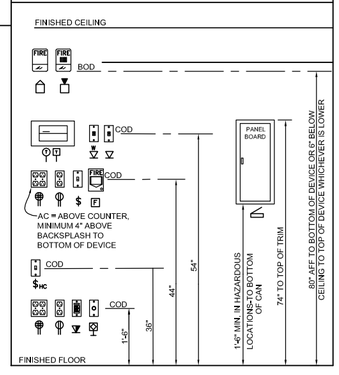

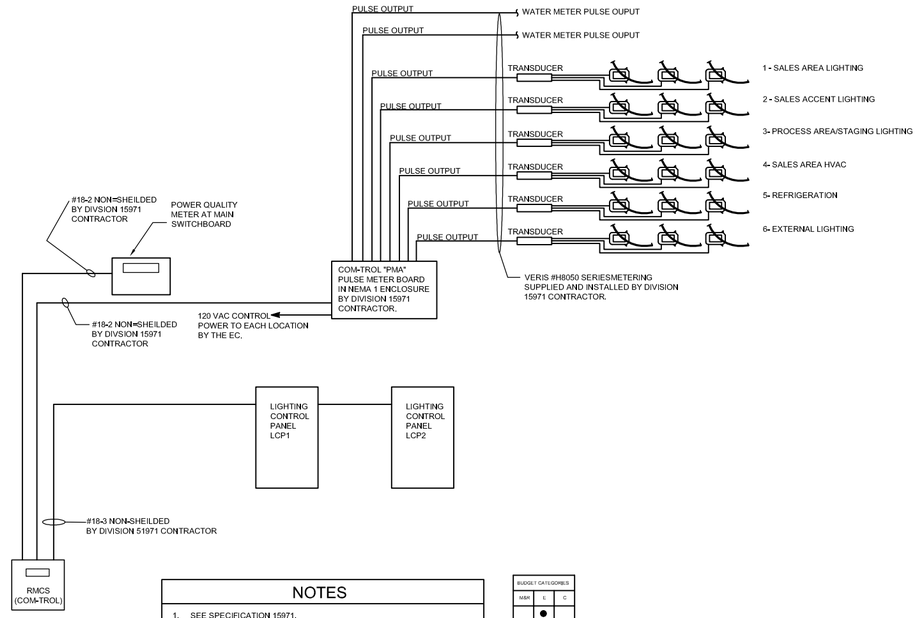

NOTES

1. SEE SPECIFICATION 15971.
2. CABLING SHALL BE CONTAINED IN 3/4" CONDUIT EXCEPT IN ENCLOSURES.

BUDGET CATEGORIES		
M&R	E	C
	●	

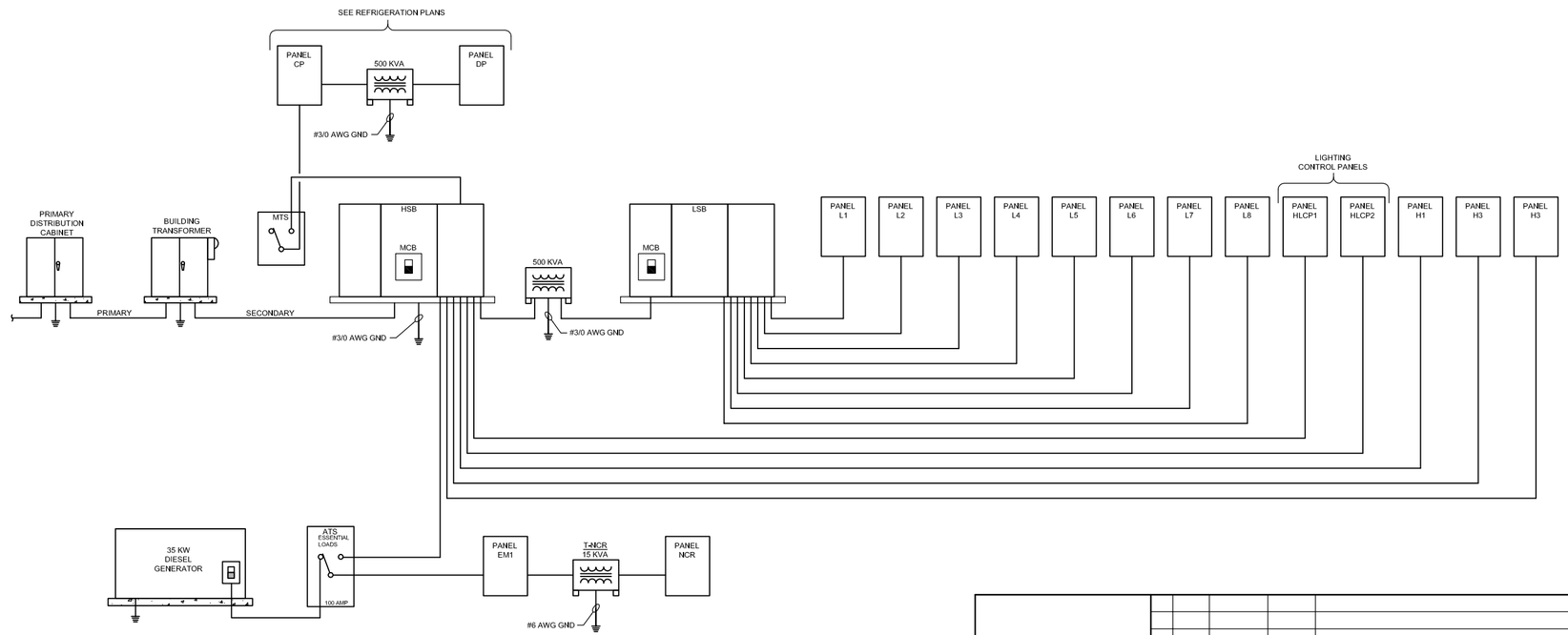

1 E4.1 ELECTRICAL POWER RISER DIAGRAM

NOT TO SCALE

NOT FOR CONSTRUCTION - PRELIMINARY DESIGN

TO THE BEST OF OUR KNOWLEDGE, INFORMATION AND BELIEF, BASED ON AND LIMITED TO OUR NORMAL FUNCTIONS PERFORMED UNDER OUR CONTRACT WITH THE GOVERNMENT, IT IS OUR PROFESSIONAL OPINION THAT THIS PROJECT IS DESIGNED IN ACCORDANCE WITH APPLICABLE DOD REGULATIONS.

SYM.	D.O. NO.	ACTION	DATE	DESCRIPTION OF REVISION

CTA ARCHITECTS & ENGINEERS
13 NORTH 23RD STREET
BILLINGS MONTANA
1.406.248.7455

DEFENSE COMMISSARY AGENCY
DIRECTORATE OF PERFORMANCE AND POLICY
FACILITIES PROGRAMMING AND PLANNING DIVISION
FORT LEE, VIRGINIA
FACILITIES CONSTRUCTION AND SUSTAINMENT DIVISION
LACKLAND AFB, TEXAS

DESIGNED BY: HAIDLE / BRUNSVOLD
DRAWN BY: BRUNSVOLD
REVIEWED BY: HAIDLE

DESIGN-BUILD NEW COMMISSARY
RFP DOCUMENTS

ELECTRICAL LEGEND

FORT POLK
LA

SUBMITTED BY: CTA ARCHITECTS ENGINEERS
ENGINEER: CTA ARCHITECTS ENGINEERS

SOL. NO.
DATE: JANUARY 3, 2012
PROJECT NO. DE10MP01
DRAWING NUMBER E4.1
SHEET NO. 6 OF 8
SEQUENCE NO. 46

FILE NAME DICAZ_FTPOLK
FILE NAME POLKE4.1
DIRECTORY REF-ENGINEERING-N

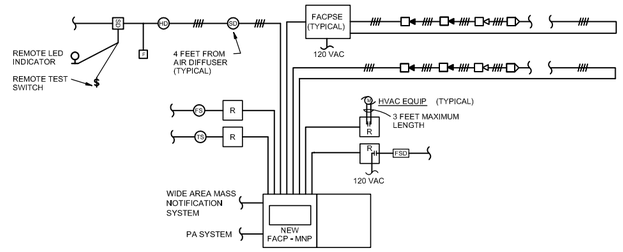

FACP = FIRE ALARM CONTROL PANEL
MNP = BUILDING MASS NOTIFICATION SYSTEM
FACPSE = FIRE ALARM PANEL SIGNAL EXTENDER PANEL
R = RELAY BY FACP SUPPLIER.

BUDGET CATEGORIES		
M&R	E	C
		●

NOTES:

1. E.C. SHALL VERIFY EXACT QUANTITIES FROM PLAN DRAWINGS THE RISER IS DIAGRAMMATIC AND DOES NOT INDICATE ALL SITUATIONS, OR ALL COMPONENTS REQUIRED FOR A COMPLETE SYSTEM.
2. LOCATE AND INSTALL DUCT SMOKE DETECTORS PER, 2010 NFPA 72 AND 2010 NFPA 90A. FOR DUCTS GREATER THAN 30" DIAMETER OR WIDTH, UTILIZE DUCT SMOKE DETECTOR MOUNTED TO THE SIDE OF THE DUCT WITH SAMPLING TUBES. FOR DUCTS SMALLER THAN 30" DIAMETER OR WIDTH, UTILIZE SMOKE DETECTOR, MOUNTED TO THE INSIDE OF A DUCT ACCESS PLATE (DETECTOR SHALL BE LISTED FOR USE IN HVAC DUCTING).
3. UPON GENERAL ALARM, ALL HVAC UNITS SHALL BE SHUTDOWN AND ALL SMOKE DAMPERS SHALL CLOSE.
4. SMOKE DETECTORS SHALL BE MINIMUM OF 4 FEET FROM AIR DIFFUSERS. CEILING MOUNTED DETECTORS SHALL NO CLOSER THAN 4" FROM WALLS. WALL MOUNTED DETECTORS SHALL BE NO CLOSER THAN 4" FROM CEILING. SMOKE DETECTORS FOR DOOR RELEASE SHALL BE WITHIN 5 FEET OF DOOR.

1 / E4.2 FIRE ALARM/MASS NOTIFICATION RISER DIAGRAM

NOT TO SCALE

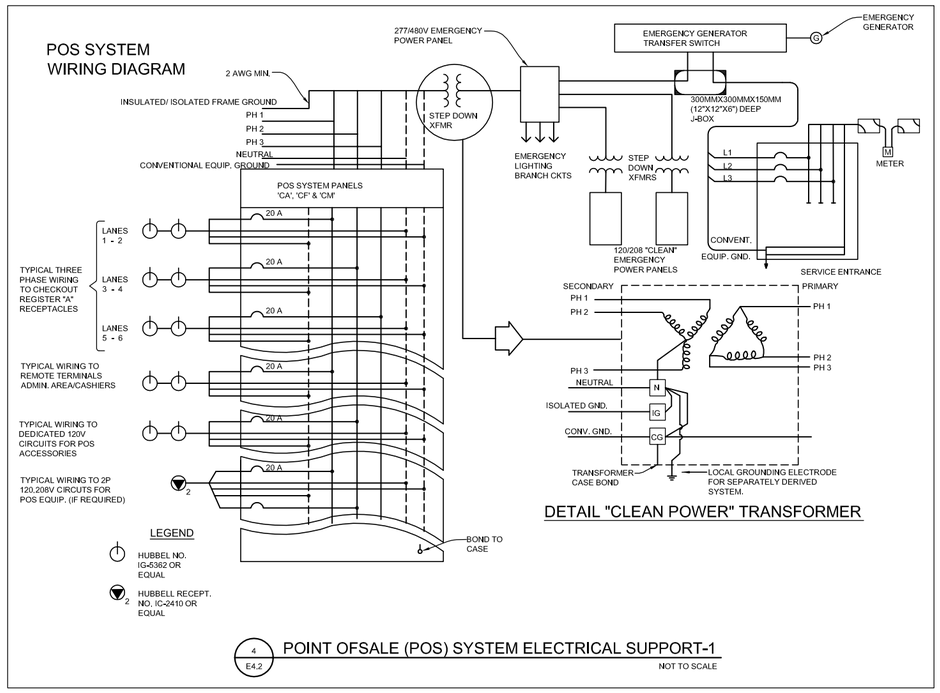

4 / E4.2 POINT OFSALE (POS) SYSTEM ELECTRICAL SUPPORT-1

NOT TO SCALE

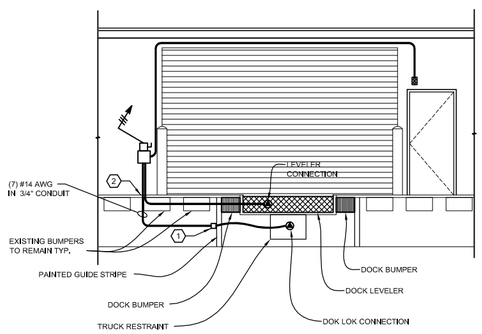

NOTES

1. PROVIDE NEMA 4, 4" X 4" X 3", SQUARE JUNCTION BOX AND PROVIDE CONNECTION TO THE 7 CONDUCTOR SO CORD SUPPLIED FROM THE VEHICLE RESTRAINT "DOK LOK".
2. GC TO SAW CUT CONCRETE AS REQUIRED TO ROUTE CONDUIT HORIZONTALLY FROM FRONT OF DOCK TO BUILDING.

BUDGET CATEGORIES		
M&R	E	C
		●

2 / E4.2 ELECTRICAL DOK-LOK RESTRAINT DETAIL

NOT TO SCALE

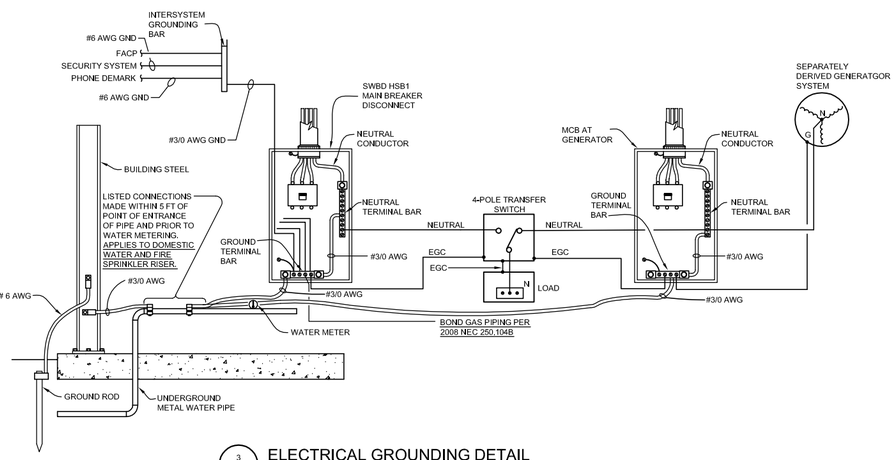

3 / E4.2 ELECTRICAL GROUNDING DETAIL

NOT TO SCALE

NOT FOR CONSTRUCTION - PRELIMINARY DESIGN

TO THE BEST OF OUR KNOWLEDGE, INFORMATION AND BELIEF, BASED ON AND LIMITED TO OUR NORMAL FUNCTIONS PERFORMED UNDER OUR CONTRACT WITH THE GOVERNMENT, IT IS OUR PROFESSIONAL OPINION THAT THIS PROJECT IS DESIGNED IN ACCORDANCE WITH APPLICABLE DOD REGULATIONS.

SYM.	D.O. NO.	ACTION	DATE	DESCRIPTION OF REVISION

CTA ARCHITECTS & ENGINEERS
13 NORTH 23RD STREET
BILLINGS MONTANA
1.406.248.7455

DEFENSE COMMISSARY AGENCY
DIRECTORATE OF PERFORMANCE AND POLICY
FACILITIES PROGRAMMING AND PLANNING DIVISION
FORT LEE, VIRGINIA
FACILITIES CONSTRUCTION AND SUSTAINMENT DIVISION
LACKLAND AFB, TEXAS

DESIGNED BY: HAIDLE / BRUNSVOLD
DRAWN BY: BRUNSVOLD
REVIEWED BY: HAIDLE

DESIGN-BUILD NEW COMMISSARY
RFP DOCUMENTS
ELECTRICAL DETAILS
FORT POLK
LA

SUBMITTED BY: CTA ARCHITECTS ENGINEERS
ENGINEER: CTA ARCHITECTS ENGINEERS

SOL. NO.
DATE: JANUARY 3, 2012
PROJECT NO. DE10MP01
SEQUENCE NO. 47
DRAWING NUMBER E4.2
SHEET NO. 7 OF 8

CTA DEFAB FORT POLK
FILE NAME POLKE2
DIRECTORY DEFAB-FORT-POLK

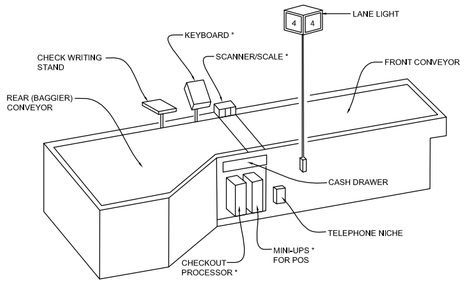

* EPOS EQUIP N.I.C.

1 / E4.3 EQUIPMENT ARRANGEMENT AT CHECKOUT STAND

NOT TO SCALE

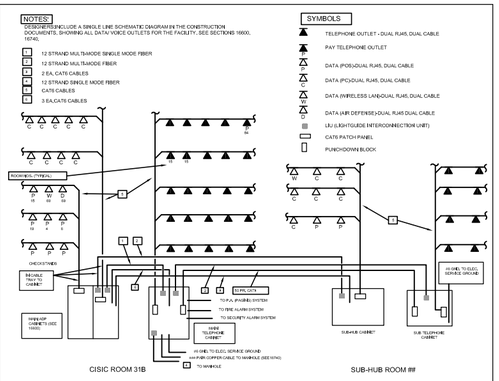

8 / E4.3 POS/LAN AND COM DATA CABLING

NOT TO SCALE

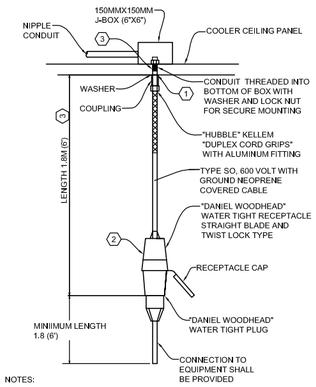

NOTES:

1. SEAL INSIDE AND OUTSIDE OF NIPPLE WITH SILICON FOR AIR TIGHT SEAL.
2. SEE ELECTRICAL LEGEND AND SYMBOLS ON DRAWINGS.
3. TO KEEP CORD OFF FLOOR, WIRE TIE EXCESS CORD IN LOOP ON UPPER SECTION OF CORD.

6 / E4.3 MEAT PROCESSING & WRAPPING ROOMS

NOT TO SCALE

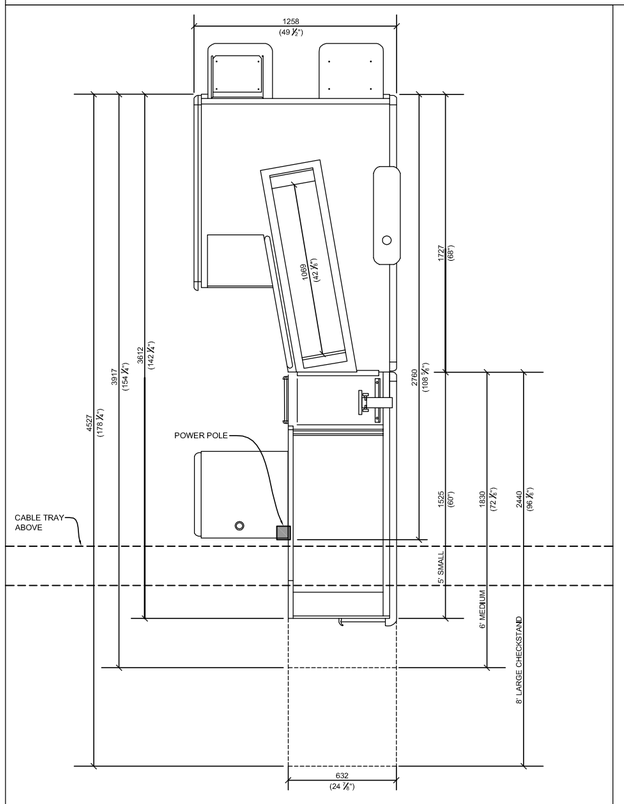

2 / E4.3 FULL SERVICE CHECKSTAND DETAIL

NOT TO SCALE

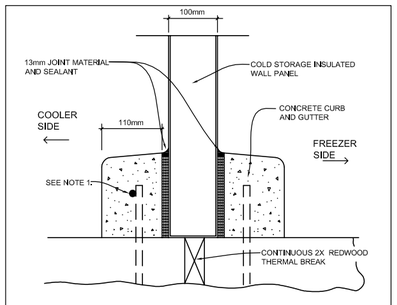

NOTE:

1. HEATING CABLE CONTINUOUS ON OUTSIDE OF FROZEN FOOD STORAGE, CABLE BY RAYCHEM, MODEL RAYSOL 2 ELECTROMELT INSULATED CABLE INSTALLED IN EMT CONDUIT, CAPACITY 12-14 WATTS/305mm, 208V, 1 0, PROVIDE CABLE ON ALL EXTERIOR CURB AROUND FROZEN FOOD.

5 / E4.3 CURB HEATER CABLE

NOT TO SCALE

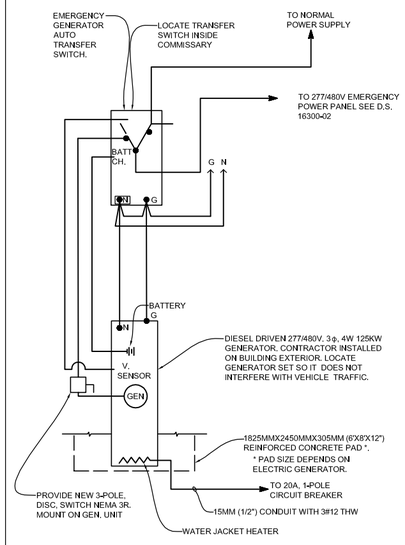

7 / E4.3 EMERGENCY GENERATOR DETAIL

NOT TO SCALE

NOT FOR CONSTRUCTION - PRELIMINARY DESIGN

TO THE BEST OF OUR KNOWLEDGE, INFORMATION AND BELIEF, BASED ON AND LIMITED TO OUR NORMAL FUNCTIONS PERFORMED UNDER OUR CONTRACT WITH THE GOVERNMENT, IT IS OUR PROFESSIONAL OPINION THAT THIS PROJECT IS DESIGNED IN ACCORDANCE WITH APPLICABLE DOD REGULATIONS.

SYM.	D.O. NO.	ACTION	DATE	DESCRIPTION OF REVISION

CTA ARCHITECTS & ENGINEERS
13 NORTH 23RD STREET
BILLINGS MONTANA
1.406.248.7455

DEFENSE COMMISSARY AGENCY
DIRECTORATE OF PERFORMANCE AND POLICY
FACILITIES PROGRAMMING AND PLANNING DIVISION
FORT LEE, VIRGINIA
FACILITIES CONSTRUCTION AND SUSTAINMENT DIVISION
LACKLAND AFB, TEXAS

DESIGNED BY: HAIDLE / BRUNSVOLD
DRAWN BY: BRUNSVOLD
REVIEWED BY: HAIDLE

DESIGN-BUILD NEW COMMISSARY
RFP DOCUMENTS

ELECTRICAL LEGEND

FORT POLK
LA

SUBMITTED BY: CTA ARCHITECTS ENGINEERS
ENGINEER: CTA ARCHITECTS ENGINEERS

SOL. NO.
DATE: JANUARY 3, 2012
PROJECT NO. DE10MP01
DRAWING NUMBER E4.3
SHEET NO. 8 OF 8
SEQUENCE NO. 48

CADD DICAD_FTPOLK
FILENAME POLKE4.3
DIRECTORY RECA_RECA_FTPOLK